ECOVACS

# DEEBOT

## Instruction Manual

# IMPORTANT SAFETY INSTRUCTIONS

## IMPORTANT SAFETY INSTRUCTIONS

When using an electrical Appliance, basic precautions should always be followed, including the following:

**READ ALL INSTRUCTIONS BEFORE USING THIS APPLIANCE**

**SAVE THESE INSTRUCTIONS**

1. This Appliance is not intended for use by persons (including children) with reduced physical, sensory or metal capabilities, or lack of experience and knowledge, unless they have been given supervision or instruction concerning use of the Appliance by a person responsible for their safety.
2. Children should be supervised to ensure that they do not play with the Appliance.
3. Clear the area to be cleaned. Remove power cords and small objects from the floor that could entangle the Appliance. Tuck rug fringe under the rug base, and lift items such as curtains and tablecloths off the floor.
4. If there is a drop off in the cleaning area due to a step or stairs, you should operate the Appliance to ensure that it can detect the step without falling over the edge. It may become necessary to place a physical barrier at the edge to keep the unit from falling. Make sure the physical barrier is not a trip hazard.
5. Only use as described in this manual. Only use attachments recommended or sold by the manufacturer.
6. For INDOOR household use ONLY. Do not use the Appliance in outdoor, commercial or industrial environments.
7. Do not use without dust bin and/or filters in place.
8. Do not operate the Appliance in an area where there are lit candles or fragile objects.
9. Keep hair, loose clothing, fingers, and all parts of body away from any openings and moving parts.
10. Do not use and store in extremely hot or cold environments (below 0˚C /32˚F or above 40˚C/104˚F). Please charge the robot in temperature above 0°C/32°F and below 40°C/104°F.
11. Do not operate the Appliance in a room where an infant or child is sleeping.
12. Do not use Appliance on wet surfaces or surfaces with standing water.

13. Do not allow the Appliance to pick up large objects like stones, large pieces of paper or any item that may clog the Appliance.
14. Do not use Appliance to pick up flammable or combustible materials such as gasoline, printer or copier toner, or use in areas where they may be present.
15. Do not use Appliance to pick up anything that is burning or smoking, such as cigarettes, matches, hot ashes, or anything that could cause a fire.
16. Do not put objects into the suction intake. Do not use if the suction intake is blocked. Keep the intake clear of dust, lint, hair, or anything that may reduce air flow.
17. If the power cord is damaged, it must be replaced by the manufacturer or its service agent in order to avoid a hazard.
18. Turn OFF the power switch before cleaning or maintaining the Appliance.
19. The lithium battery type suitable for CH2620 is Max. 4 cells, max. nominal voltage DC 14.4V, rated capacity 3,600mAh.The battery must be removed and discarded according to local laws and regulations before disposal of the Appliance.
20. Please dispose of used batteries according to local laws and regulations.
21. Do not incinerate the Appliance even if it is severely damaged. The batteries can explode in a fire.
22. The Appliance must be used in accordance with the directions in this Instruction Manual. Ecovacs Home Service Robotics cannot be held liable or responsible for any damages or injuries caused by improper use.
23. The robot contains batteries that are only replaceable by skilled persons. To replace the robot's battery, please contact Customer Service.
24. Please make sure your power supply source voltage matches the power voltage marked on the OMNI Station.
25. Use only the original rechargeable battery and OMNI Station provided with the Appliance from the manufacturer. Non-rechargeable batteries are prohibited.
26. Take care not to damage the power cord. Do not pull on or carry the Appliance or OMNI Station by the power cord, use the power cord as a handle, close a door on the power cord, or pull power cord around sharp edges or corners. Do not run Appliance over the power cord. Keep power cord away from hot surfaces.

27. Do not use the OMNI Station if it is damaged. The power supply is not to be repaired and not to be used any longer if it is damaged or defective.
28. Do not use with a damaged power cord or receptacle. Do not use the Appliance or OMNI Station if it is not working properly, has been dropped, damaged, left outdoors, or come in contact with water. It must be repaired by the manufacturer or its service agent in order to avoid a hazard.
29. The plug must be removed from the receptacle before cleaning or maintaining the OMNI Station.
30. Remove the Appliance from the OMNI Station, and turn OFF the power switch to the Appliance before removing the battery for disposal of the Appliance.
31. When not using the OMNI Station for a long period of time, please unplug it.
32. If the robot will not be used for a long time, power OFF the robot for storage and unplug the OMNI Station.
33. WARNING-Add clean water into the clean tank only.
34. **WARNING:** For the purposes of recharging the battery, only use the detachable supply unit CH2620 provided with the Appliance.

To satisfy RF exposure requirements, a separation distance of 20 cm or more should be maintained between this device and persons during device operation.

To ensure compliance, operations at closer than this distance is not recommended. The antenna used for this transmitter must not be co-located in conjunction with any other antenna or transmitter.

**Device Update**

Typically, some devices are updated bi-monthly, but not always so specific.

Some devices, especially those that went on sale more than three years ago, will only be updated if a critical vulnerability is found and fixed.

| | |
|---|---|
|  | Caution: hot surface |
|  | Short-circuit-proof safety isolating transformer |
|  | Switch mode power supply |
|  | For indoor use only |
|  | Direct current |
|  | Alternating current |
|  | Before charging, read the instructions. |
|  | Polarity of the charging port |
|  | Time-lag miniature fuse-link |
|  | Class II |



## Correct Disposal of this Product

This marking indicates that this product should not be disposed of with other household waste throughout the EU. To prevent possible harm to the environment or human health from uncontrolled waste disposal, recycle it responsibly to promote the sustainable reuse of material resources. To recycle your used device, please use the return and collection systems or contact the retailer where the product was purchased. They can safely recycle this product.

# Product Overview

## ❶ Product Diagram

### 1. DEEBOT Front View

Buttons on DEEBOT:
Tap: Toggle start/Pause
Press for 3 s: Return to the station

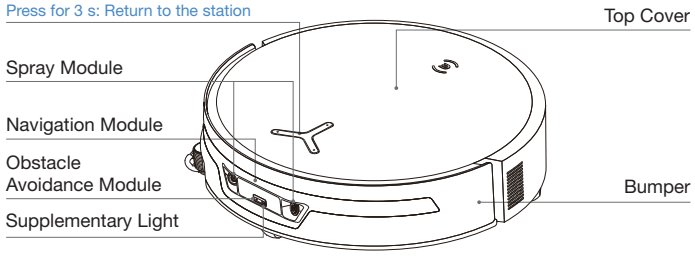


### 2. DEEBOT Bottom View

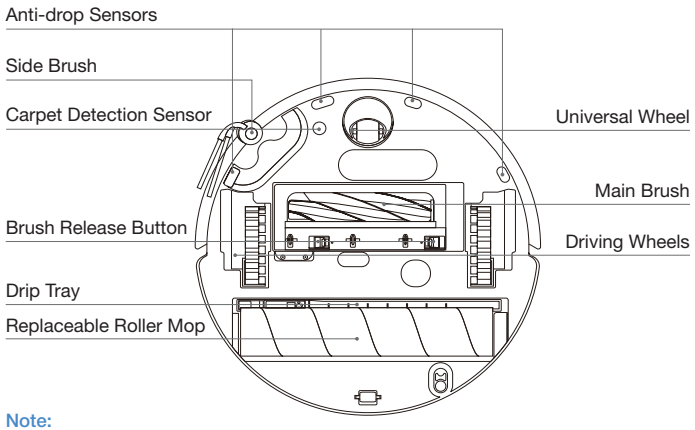


Note:
*Figures in this manual are for reference only and may differ from the appliance.

### 3. Inside DEEBOT(Underthe Top Cover)

RESET Button
Network Setup: Press the RESET Button, and a voice prompt will be heard to connect DEEBOT to the App.
Restore default settings: Press and hold the RESET button for 5 seconds. After hearing the voice prompt, the startup music will play, and DEEBOT will be restored to its default settings. Exercise caution when using this function.

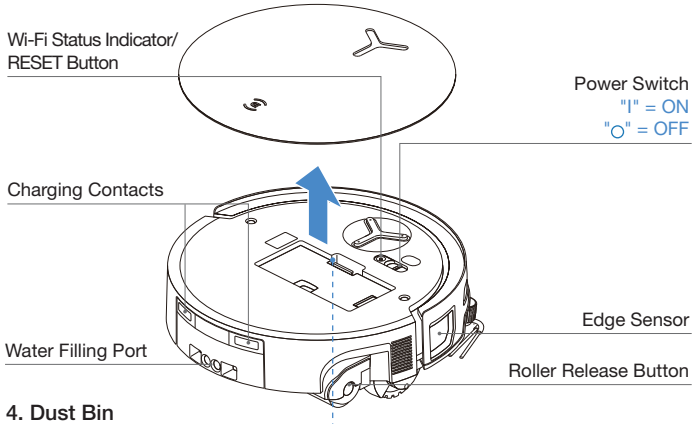


### 4. Dust Bin

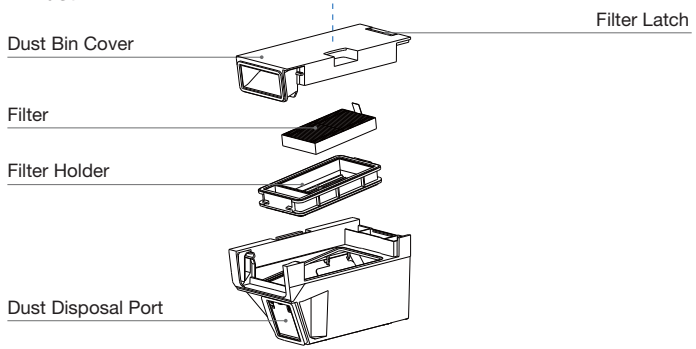

## 5. OMNI Station Front View

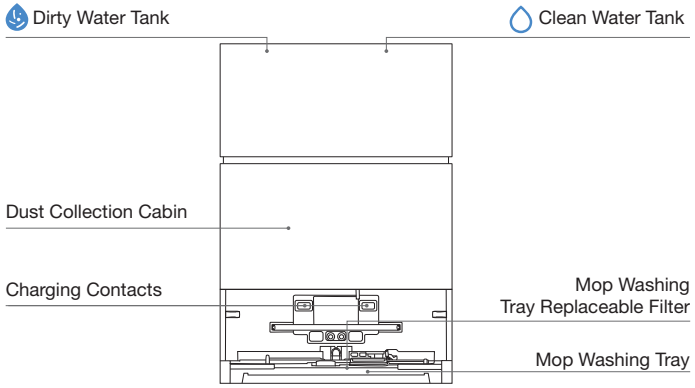


## 6. OMNI Station Back View

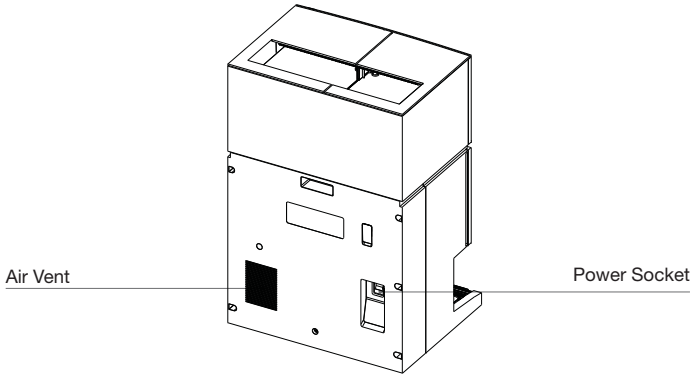


## 7. Indicator Light on DEEBOT

| Light Effect | State |
|---|---|
| Breathing White | Charging |
| Solid White | Fully Charged/Running |
| Solid Red | Low Battery |
| Flashing Red | DEEBOT Alarm |
| Flashing Orange | Station Alarm |

Note:

- Flashing Orange or Red: Please check the App for the cause of the malfunction.
- If DEEBOT fails to charge, please wipe the charging contacts with a clean and dry cloth.

## 8. Sensors Overview

| Name | Functional Description |
|---|---|
| Navigation Module | Laser Ranging is applied to measure the distance between DEEBOT and surrounding objects based on the time difference of reflection, allowing the module to map against the objects around while DEEBOT is moving. The detection range is 10m. |
| Obstacle Avoidance Module | Infrared Ranging and similar triangles are applied to measure the distance between the surrounding objects and DEEBOT. When the sensor detects an object nearby, DEEBOT will automatically take a turn to avoid bumping into the object. The detection range is 0.3 m. |
| Anti-drop Sensors | Using the Time-of-Flight (dToF) principle, the dToF sensor located on DEEBOT's bottom continuously measures the distance between DEEBOT and the ground. Meanwhile, infrared sensors on the bottom detect the distance using infrared ranging technology. DEEBOT will not move forward when there are stairs in front (such as when the height of the white surface is 55 mm or more, or the height of the black surface is 30 mm or more) and the identified height exceeds the preset one, realizing the anti-drop feature. |
| Carpet Detection Sensor | The sensor emits 300 kHz ultrasound, whose energy will be absorbed by the carpet, causing the echoed energy to be lower than the threshold. DEEBOT thereby detects the carpet's presence. In the ECOVACS laboratory, more than 50 types of carpets available on the market are identified. |
| Anti-collision Sensor | With the principle of the Optocoupler Switch, DEEBOT will avoid obstacles when they are about to collide. |
| Edge Sensor | With Infrared Ranging, the edge sensor detects the distance between the DEEBOT and objects on the side. When there is a wall or obstacles on the right, the DEEBOT performs edge cleaning to avoid missing any spots and prevent collisions. |
| AIVI Camera | AI intelligent analysis is utilized for environmental sensing and efficient video management (for some models). |
| Microphone | The microphone captures sound through diaphragm vibrations caused by the human voice traveling through the air. This enables voice recording and Voice Control to direct the DEEBOT to complete the assigned job through the acquisition and algorithms of sound models. The effective wake distance is 5 m. |

# INITIAL SETUP AND USE

## 1 Notes before Cleaning

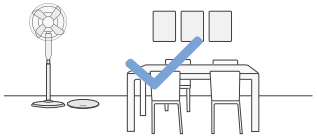

### Tidy up the Area to be Cleaned

For the maximum cleaning area possible, put furniture, such as tables, chairs, and pedestal fans, in their proper place and put away low-lying items, such as weight scales, before using DEEBOT.

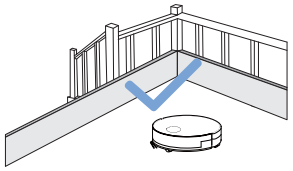

### Prevent DEEBOT from Falling

Place a physical barrier at the edge of a drop, such as staircases and steps, to stop DEEBOT from falling over the edge.

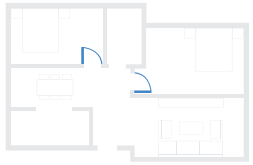

### Open Doors and Help DEEBOT Explore

Open all room doors to help DEEBOT fully explore your house during the first use.

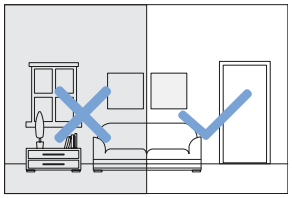

### Provide Sufficient Lighting

Ensure all cleaning areas are well-lit to support DEEBOT's Obstacle Avoidance Module in accurately avoiding obstacles such as shoes, socks, and cords.



Remove objects, including cables, clothes, and slippers, from the floor to improve cleaning efficiency.



Before using the product on a carpet with tasseled edges, please fold the tassels under the carpet.



Please do not stand in narrow spaces, such as hallways, to avoid blocking the navigation module.



Ensure the clarity of DEEBOT's vision and avoid scratching or smudging the Obstacle Avoidance Module lens with fingerprints or oily stains. Use a clean, soft cloth to wipe the camera, instead of cleaning agents, detergents, or sprays.

## 2 Quick Start

Remove all protective materials before using the appliance.

### 1. Station Installation

The sound of "click" indicates proper installation.

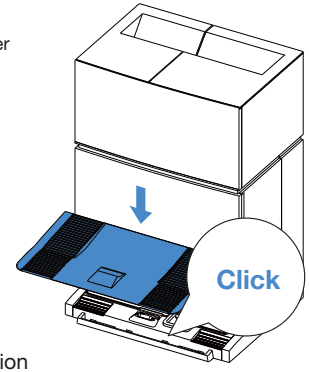


### 2. Assemble and Place the Station

Place the OMNI station against the wall on a flat, hard surface. Do not place items within 0.05 m on either side and 0.8 m in front.

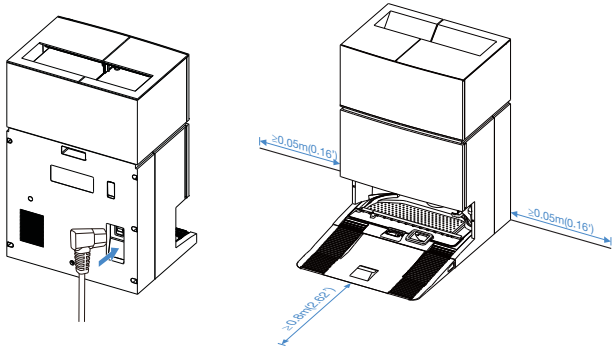


**Note:**

- If there are reflective objects such as mirrors and reflective skirting lines near the station, the bottom 14 cm of such objects should be covered.
- Do not place the station under direct sunlight or in high-temperature environments.
- Place the station in a location with a strong Wi-Fi signal for a better user experience.

## 3 Download ECOVACS HOME APP

**To enjoy all available features, it is recommended that you control your DEEBOT via the ECOVACS HOME App.**

Scan the QR code under the top cover to download the ECOVACS HOME App.

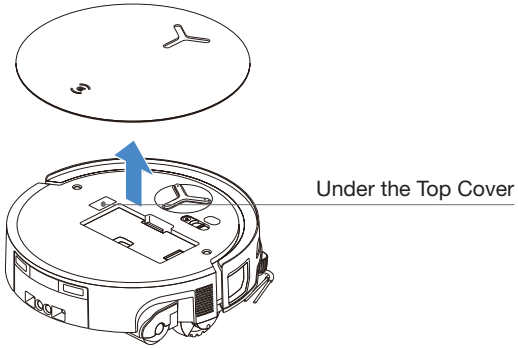


Or search "ECOVACS HOME" on the App Store or Google Play to download the ECOVACS HOME App.




Note: Follow the instructions on the App to complete the registration, login, and connection.

## 4 Connect DEEBOT with APP

Turn on DEEBOT and tap or Scan to Add Robot in the app, then follow the prompts to start network setup.

**Wi-Fi Network Requirements:**

- You are using a 2.4 GHz or 2.4/5 GHz mixed network.
- Your router supports 802.11b/g/n and IPv4 protocol.
- Do not use a VPN (Virtual Private Network) or Proxy Server.
- Do not use a hidden network.
- WPA and WPA2 using TKIP, PSK, AES/CCMP encryption.
- WEP EAP (Enterprise Authentication Protocol) is not supported.
- Use Wi-Fi channels 1-11 in North America and channels 1-13 outside North America (refer to local regulatory agency).
- If you are using a network extender/repeater, the network name (SSID) and password are the same as those of your primary network.
- Please enable the WPA2 on your router.

### Wi-Fi Indicator Light

| | | |
|---|---|---|
|  | Slow flashing white light | Disconnected from Wi-Fi |
| | Fast flashing white light | Connecting |
| | Steady white light | Connected to Wi-Fi |

Please be aware that intelligent features such as remote startup, voice interaction, 2D/3D map display and control settings, and personalized cleaning (depending on the Appliance) require the ECOVACS HOME App, which is constantly updated. You need to agree to our Privacy Policy and User Agreement so that we can process some of your essential and necessary information before you can use certain features of the App to control the Appliance. If you disagree with our Privacy Policy and User Agreement, such features will be unavailable. However, you can still use the basic features of this appliance for manual operation.

**Network Interface Information**

| Name | Description |
|---|---|
| Infrared interface | The infrared interface is turned off by default, and it is activated when DEEBOT is in the charging station. When the DEEBOT is in the charging station, it will communicate with the charging station through the infrared interface. |
| Bluetooth | Enable Bluetooth to connect DEEBOT to the network during the network setup process. Bluetooth uses the GAP1800, GATT 1801, 8888 service for configuration and data interaction securely. |
| WI-FI* | Facilitate data transfer between the app and DEEBOT, enabling control of DEEBOT through the app. |
| ECOVACS HOME App | ECOVACS products offer smart functions such as network setup, mapping, and cleaning mode selection (specific to each product). To utilize these features, users need to download and use the official ECOVACS HOME App. |

* The DEEBOT series robotic vacuums are designed for domestic cleaning scenarios. A home Wi-Fi network is required for operation, and anti-DDoS protection needs to be configured by users through route settings.

## 5 Power on and Charge DEEBOT

Move DEEBOT back to the station. The voice prompt "Start charging" indicate a successful docking and charging in progress. Start using DEEBOT after creating a map in the ECOVACS HOME APP.

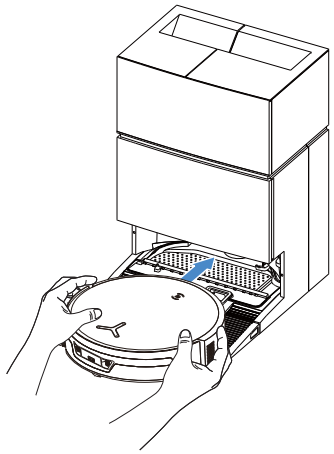

**Note:**

- DEEBOT cannot charge when it is powered off.
- After cleaning, it is recommended to keep DEEBOT powered on and charging to ensure it is ready for the next cleaning session.
- To ensure DEEBOT can return to charge smoothly after cleaning, start cleaning from the station and avoid moving the station during the process.

## 6 Fill the Clean Water Tank

Take out the clean water tank, open the tank cover, and fill the tank with water. Close the tank cover and reinstall the clean water tank.

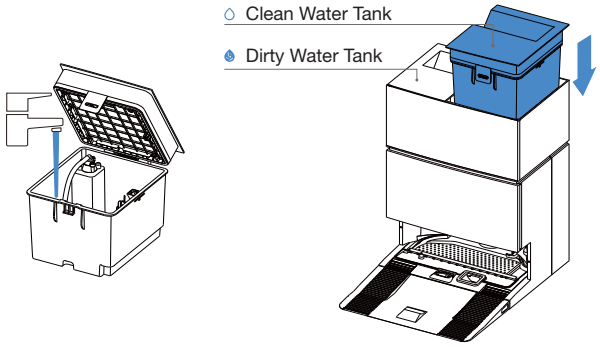


**Note:**

- Use only ECOVACS DEEBOT cleaning solution to avoid malfunctions.
- Use a clean, dry cloth to wipe off any water on the surface of the tank before placing it in position.
- Make sure to lock the top covers of both water tanks securely before use.
- Any watermarks in the water tanks are from function testing. Please use it with confidence.

## 7 Add Cleaning Solution

1. Take off the dust collection cabin cover, pull out the two cleaning soluution boxes, and place them on a level, hard surface.

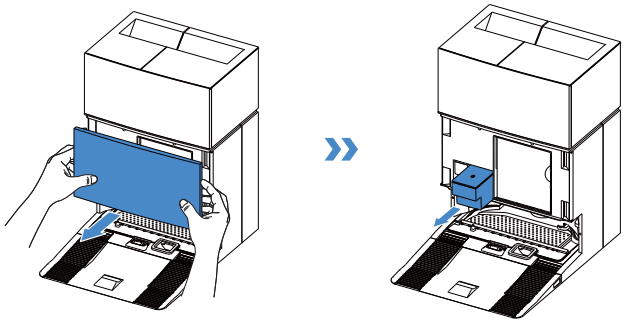

2. Pour the cleaning solution into the blue box and the heavy-duty cleaning solution into the black box. After securing the box lids, push them back into the station and close the tank lid.

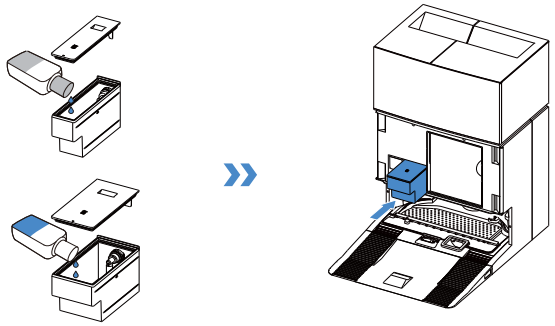

**Note:** Do not pour cleaning solution into the clean water tank. Add it to the cleaning solution tank instead. Otherwise, an incorrect ratio may cause excessive foaming and reduce cleaning effectiveness.

3. Return the dust collection cabin cover and press the cover firmly to secure it in position.

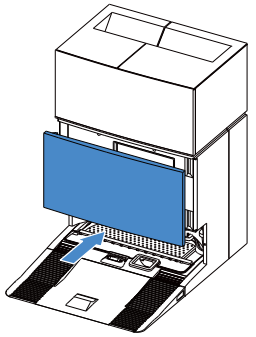

**Note:**
- Do not overfill with cleaning solution, as it may overflow when the lid is secured. This step can be skipped if you do not use floor cleaning solution regularly and the Auto Cleaning Solution Dispense function can be disabled in the APP.
- For better performance and longer lifespan of the product, please use ECOVACS DEEBOT cleaning solution.
- Please make sure that no foreign objects fall into the cleaning solution box.

## 8 Operate DEEBOT for Cleaning

### 1. Start Mapping

When creating a map for the first time, please follow DEEBOT to help with some issues. For example, DEEBOT may get stuck under furniture. Please refer to the following solutions:

① Raise the low-sitting furniture if possible;
② Cover the bottom of the furniture;
③ Set up a virtual boundary via the App.

### 2. Start Cleaning

- The DEEBOT's water tank is automatically refilled through the station. Manual refilling is not needed.
- When mopping, DEEBOT will recognize floor types and is able to lift mops automatically when encountering carpets. Please do not use DEEBOT on shaggy rugs or carpets . It is recommended to fold up the shaggy rugs during the cleaning process, or set the carpeted area as a no-entry zone by setting a virtual boundary in the App.

Please ensure that DEEBOT is in the station and is fully charged before cleaning for the first time. Tap ⏻ on DEEBOT to start. You can also use the ECOVACS HOME App or voice control to start.

### 3. Pause

Tap ⏻ on DEEBOT to pause it while it is working. You can also use the ECOVACS HOME App or voice control to pause DEEBOT.

### 4. Wake Up

After pausing for a while, all indicator lights on DEEBOT will go out. To wake up DEEBOT, press ⏻.

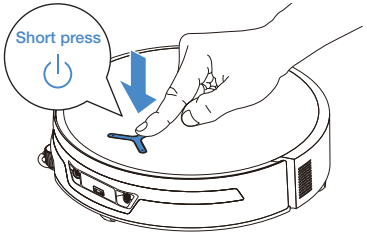


### 5. Back to Station

Use the ECOVACS HOME App or voice control to recall DEEBOT, or press and hold the ⏻ button on DEEBOT for 3 s, to allow DEEBOT to dock for charging.

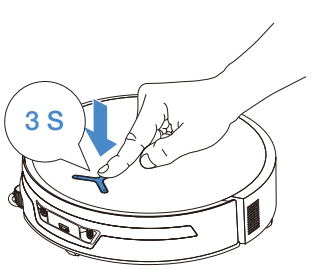


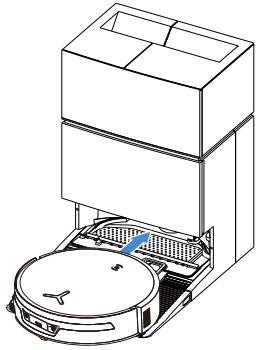

### 6. Deep Sleep Mode

DEEBOT will enter deep sleep mode if it stays outside the station for about 10 h to protect the battery. Please switch OFF and ON to wake DEEBOT up.

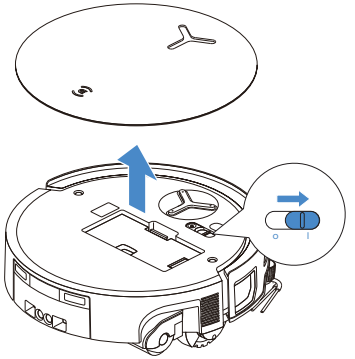

When DEEBOT returns to the station during a task, PowerBoost Charging will start by default and take approximately 5 minutes. It will then switch to standard charging and stop automatically once fully charged.

# REGULAR MAINTENANCE

## ❶ Maintenance Frequency

To keep DEEBOT running at peak performance, perform maintenance and replace parts at the following frequencies:

| Part | Maintenance Frequency | Replacement Frequency |
|---|---|---|
| Replaceable Roller | / | Every 1-2 months |
| Drip Tray | Every week | / |
| Dust Bag | / | When the App prompts |
| Side Brush | Every 2 weeks | Every 3-6 months |
| Main Brush, Main Brush Cover | Every week | Every 6-12 months |
| Filter | Every week | Every 3-6 months |
| Universal Wheel<br>Anti-drop Sensors<br>Bumper<br>Charging Contacts on DEEBOT<br>Charging Contacts on OMNI Station<br>Navigation Module<br>Obstacle Avoidance Module | Approx. every month | / |
| Clean Water Tank | Every 3 months | / |
| Dirty Water Tank | Every month | / |
| Body and Bottom of the Station | Every month | / |
| Mop Washing Tray Replaceable Filter | Every 2 weeks | / |
| Cleaning Solution Unit | Every month | / |

Note: Explore more accessories at the ECOVACS HOME App or at https://www.ecovacs.com.

## ❷ DEEBOT Maintenance

### 1. Maintain Dust Bin and Filter

1. Remove the dust bin and then empty it.

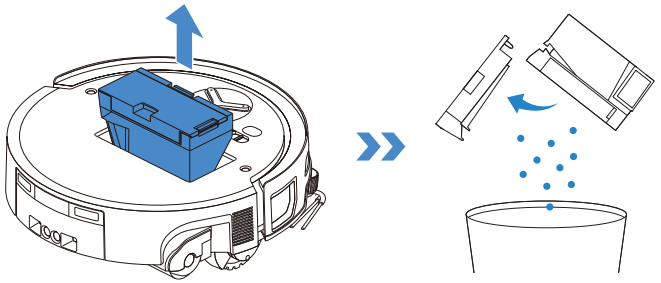

2. Open the filter net and remove the filter.

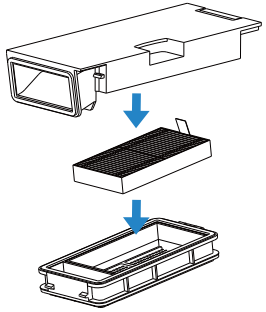

3. Rinse the dust bin and filter with water, and shake off the water droplets.

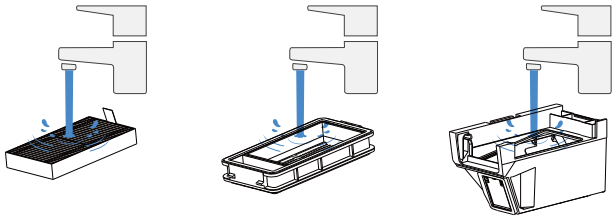

Note:
- Please rinse the filter with water as shown.
- Do not use fingers or brushes to clean the filter.

4. Air-dry the dust bin and filter.

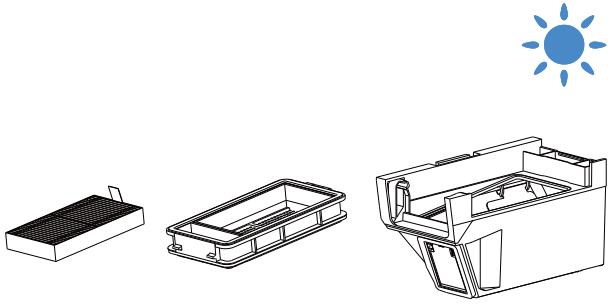

Note: Completely dry the components before use.

## 2. Maintain Main Brush and Side Brush

### Clean Main Brush

1. Remove the cover from the main brush.

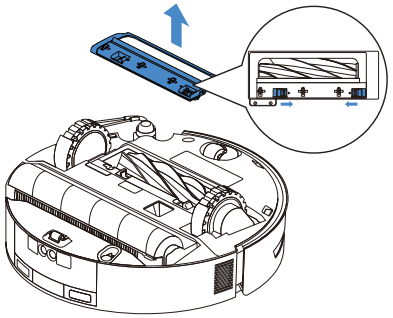

2. Remove and clean the main brush and its chamber.

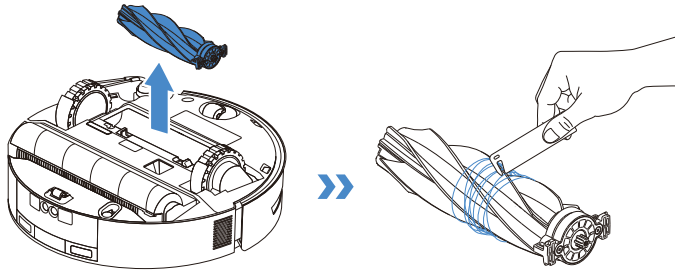

3. Install the main brush, and the cover.

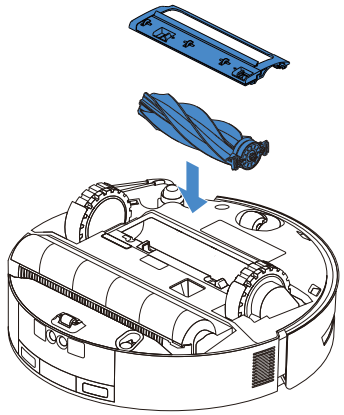

### Clean Side Brush

Remove the side brush using a screwdriver and clean it.

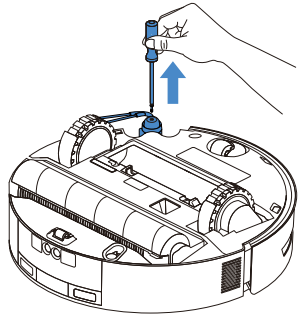

## 3. Maintain Roller Components

### Clean Roller Mop

1. Press the roller release button on the side of the roller mop, gently lift, and remove the roller mop.

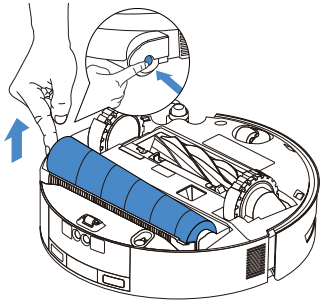

2. Remove the roller end cover, clean and dry the roller mop. Wipe the roller chamber with a damp cloth that has been wrung out.

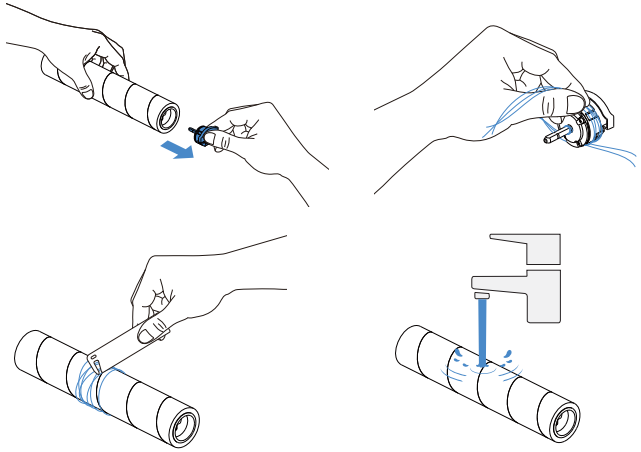

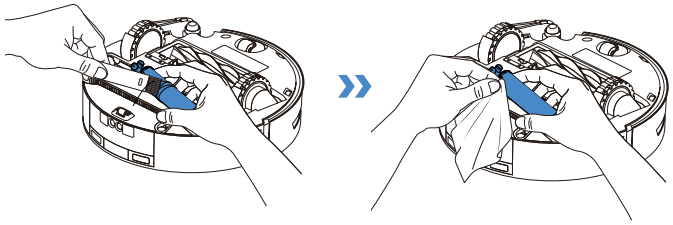

Note:
• Do not pull roller motor components forcefully during cleaning to avoid damage.
• Do not rinse DEEBOT with water.

3. Reinstall the roller end cover and attach the roller mop to the motor. Once the mop is in place, align the roller release button with the groove on the side of the roller chamber and press it. A "click" sound indicates the mop is properly installed.

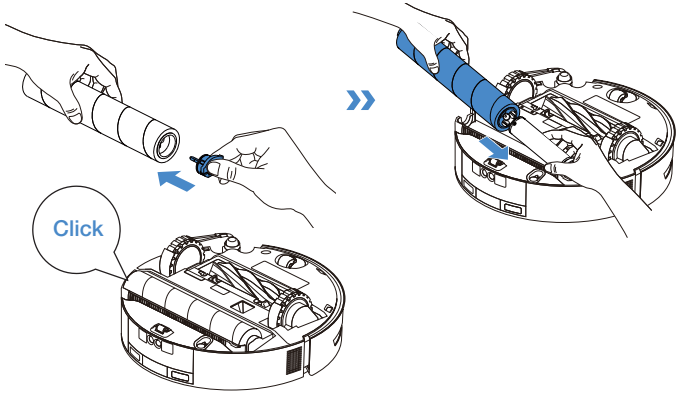


Note: Explore more accessories at the ECOVACS HOME App or at https://www.ecovacs.com.

## 4. Maintain Drip Tray

### Clean the Drip Tray

1. Push up the release button to remove the drip tray, then clean and dry it.

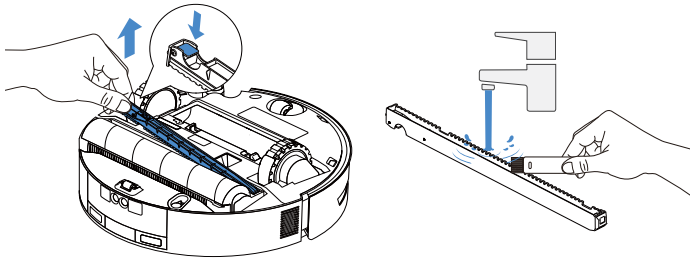

Note: A small amount of residual water may leak out when flipping DEEBOT if it's not in drying mode.

2. Reinstall the drip tray and press down firmly until it's properly installed.

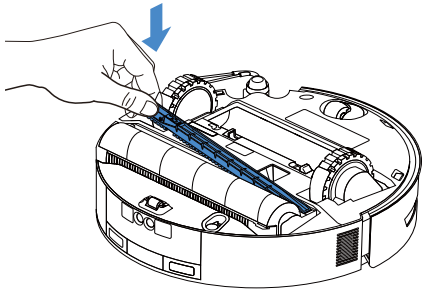

## 5. Clean Mop Roller Cover

1. After removing the roller mop, slide the mop roller cover release switch to the right to unlock it.

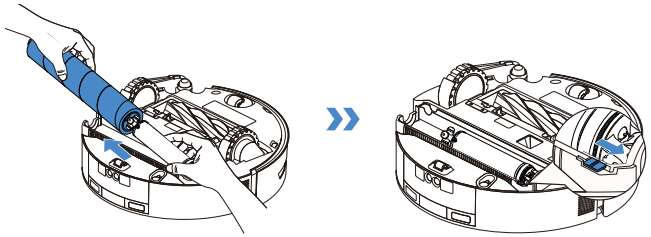

2. Grip the mop roller cover by the groove on the roller chamber, then gently twist and lift it off.

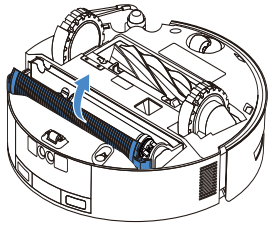

3. Once the mop roller cover is cleaned and dried, align its axle with the track on the left side of the roller chamber, reinstall it, and lock the release switch.

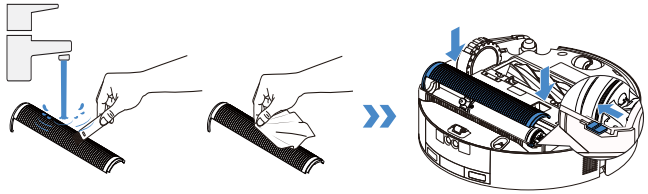

## 6. Maintain Other Components

### Clean the  Anti-drop Sensors

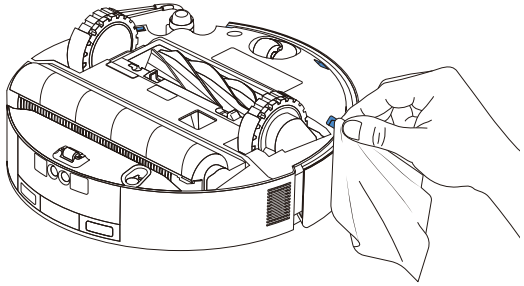

### Clean the Universal Wheel

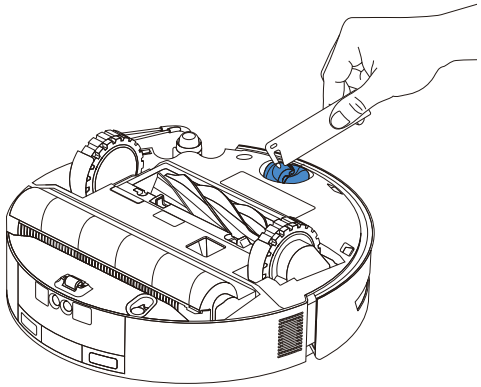

### Clean the Driving Wheels

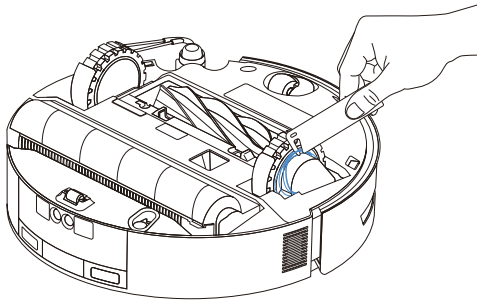

### Clean the Obstacle Avoidance Module Lens

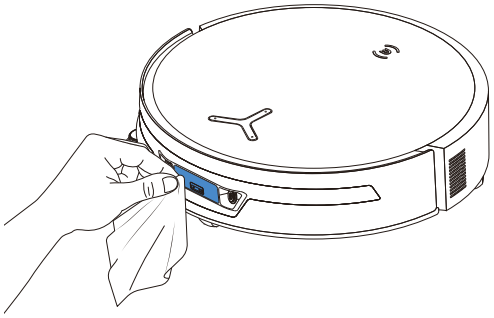

### Clean the Edge Sensor

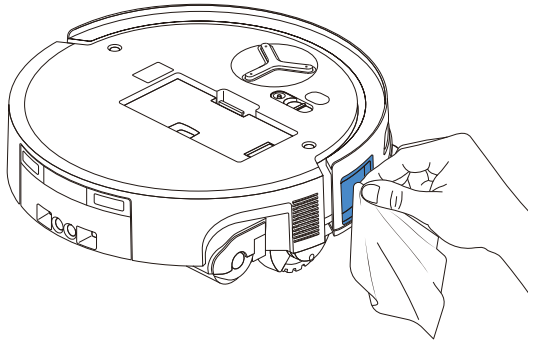

### Clean the Bumper

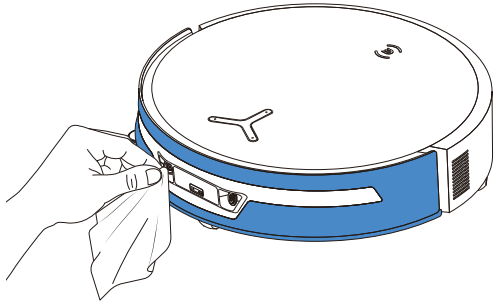

### Clean the Navigation Module

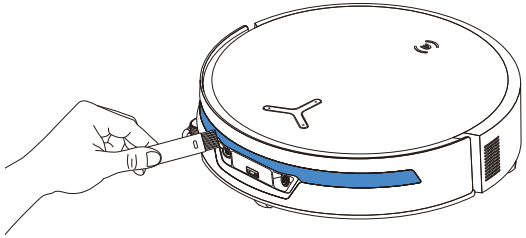

### Clean Charging Contacts

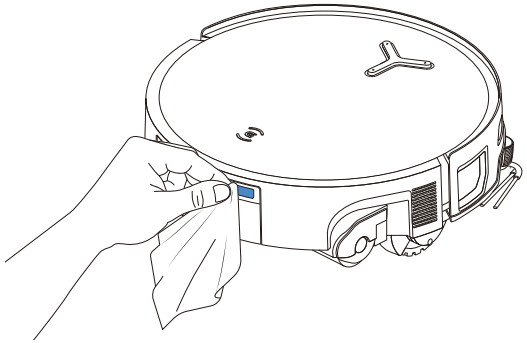

Note:
• Wipe the components with a clean, dry cloth. Never use a wet cloth. Do not use cleaning sprays or detergents, as moisture may cause damage.
• Charging contacts contain sensitive electronic components. Clean them with a dry cloth. Do not use a wet cloth to prevent water damage.

## ❸ Station Maintenance

### 1. Maintain Dust Bin

1.Remove the dust collection cabin cover.

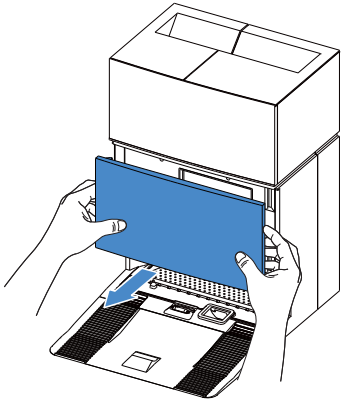

2. Remove the disposable dust bag in the direction of the arrow and discard it.

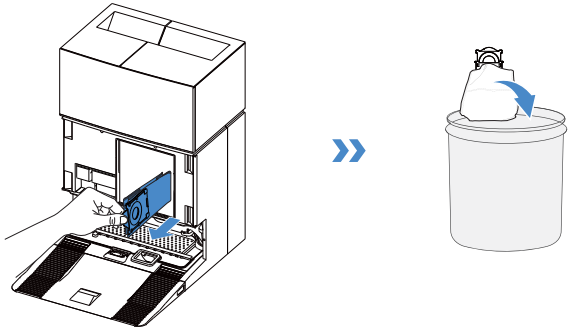

Note: Hold the handle to lift out the dust bag, which can effectively prevent dust leakage.

3. Clean the dust container with a dry cloth and install a new dust bag.

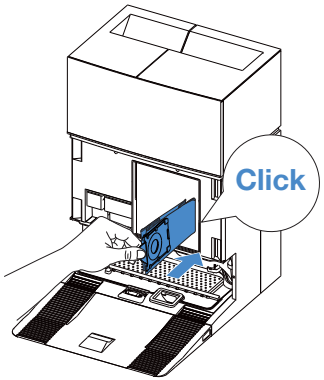


4. Insert the top latch of the dust container cover into the slot, and then press downward to ensure a proper seal.

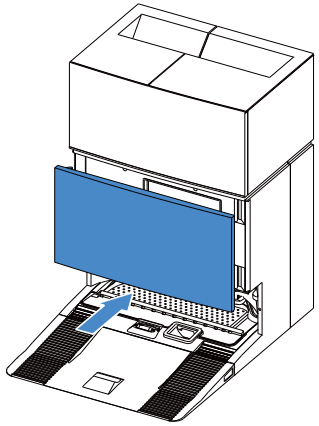

## 2. Maintain Mop Washing Tray

1. Remove and clean the station base.

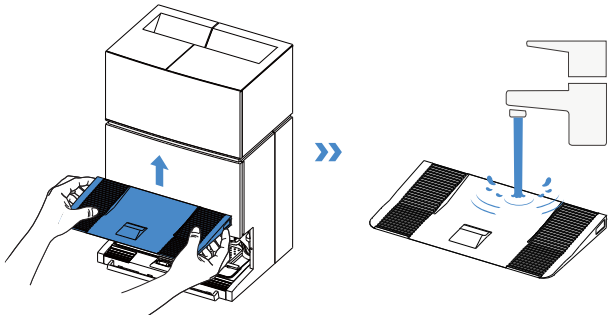

2. Remove the mop washing tray. Press the latch on the tray to remove the repalceable filter and clean it.

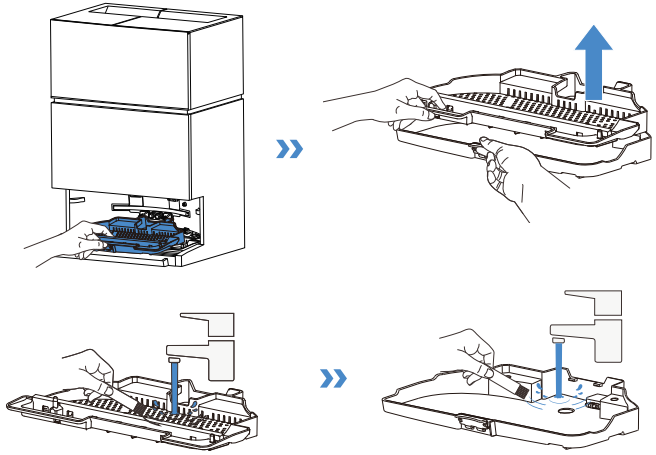

3. Reinstall the mop washing repalceable filter, tray and station base in order. A "click" sound indicates they are securely in place.

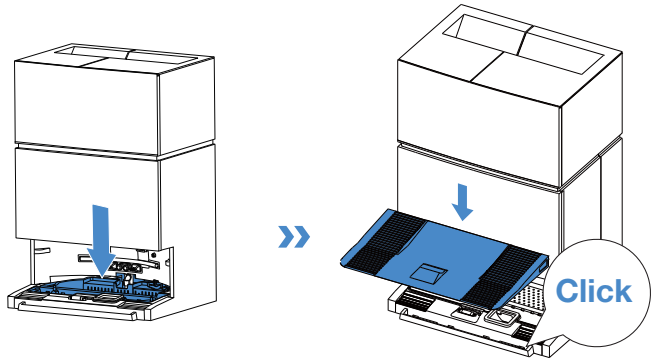


Note: Please install it correctly before use.

## 4 Storage

Please fully charge and switch OFF DEEBOT before storage. Please recharge it every 1.5 months to prevent the battery from over-discharging.

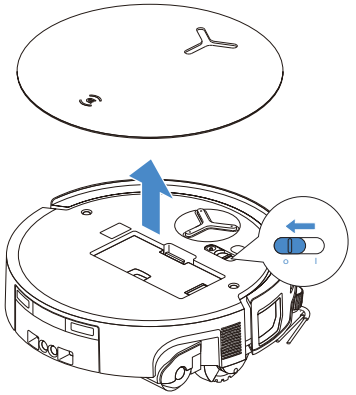

Please note that DEEBOT cannot charge when powered OFF.

Note:

- After DEEBOT finishes its cleaning task, it is recommended not to power it off but to keep it charging, to better prepare for the next cleaning session.
- If the battery is over-discharged or not used for a long time, DEEBOT may not be charged. Please contact ECOVACS for help. Do not disassemble the battery by yourself.
- If you do not use DEEBOT for a long time, use the Device Relocation feature in the App to drain the clean water inside DEEBOT, keep the station water tanks empty, and the roller mops dry.

# TROUBLESHOOTING

For the following possible issue, refer to the corresponding solutions.

| No. | Malfunction | Possible Cause | Solution |
|---|---|---|---|
| 1 | DEEBOT is not able to connect to the App. | Incorrect Wi-Fi username or password entered. | Enter the correct Wi-Fi username and password. |
| | | DEEBOT is not within range of your home Wi-Fi signal. | Make sure DEEBOT is within range of your home Wi-Fi signal. Try to stay as close to the router as possible. |
| | | DEEBOT is not in the configuration state. | Press the Reset button to connect DEEBOT to your phone by Bluetooth. If it fails, please press the Reset button + ⏻ and connect via the App. |
| | | There is no home Wi-Fi on the Wi-Fi list. | Check if the Wi-Fi name contains special characters. Please do not use special characters like ! @#& ¥%/\.<br>Do not use a 5 Ghz network. |
| | | An incorrect App is installed. | Please download and install the App. |
| 2 | Unable to create the furniture map in the App. | Moving DEEBOT when cleaning might cause the map to be lost. | During cleaning, do not move DEEBOT. |
| | | Auto cleaning is not finished. | Make sure DEEBOT automatically returns to the OMNI Station after cleaning. |
| | | Multi-floor mode was not enabled when the second map was created. | Please enable multi-floor mode in the App. |
| 3 | The side brush drops out of place during use. | The side brush is not properly installed. | When installing the side brush with a screwdriver, ensure the screw is tightened securely. |
| 4 | No signal found. Unable to return to the station. | The OMNI Station is incorrectly placed. | Place the station properly according to the instructions in the [Power on and Charge DEEBOT] section. |
| | | Station is out of power or has been moved. | Check whether the OMNI Station is connected to the power supply. Do not move the OMNI Station. |
| | | DEEBOT does not start cleaning from the OMNI Station. | It is recommended that DEEBOT start cleaning from the OMNI Station. |
| | | The docking route is blocked. For example, the door is closed to the room where the OMNI Station is placed. | Keep the charging route clear. |

| No. | Malfunction | Possible Cause | Solution |
|---|---|---|---|
| 5 | DEEBOT returns to the OMNI Station before it has finished cleaning. | The room is so large that DEEBOT needs to return to recharge. | Please enable auto resume. For more details, please follow the App instructions. |
| | | In highly complex home layouts, cleaning efficiency may decrease, possibly resulting in incomplete cleaning. | Simplify your home layout. |
| 6 | DEEBOT is unable to charge. | DEEBOT is not switched ON. | Switch ON DEEBOT. |
| | | DEEBOT's charging contacts are not connected to the OMNI station's charging contacts. | Make sure that DEEBOT's charging contacts have connected to the station's charging contacts and flashes. Check whether DEEBOT's and OMNI station's charging contacts are dirty. Please clean these parts according to the instructions in the [REGULAR MAINTENANCE] section. |
| | | The OMNI Station is not connected to the power supply. | 1. Make sure the OMNI station is connected to power supply.<br>2. Once the power is connected, ensure that the motor startup sound can be heard. |
| | | The base has not been installed in place. | Refer to the [Quick Start] section for correct installation. |
| 7 | DEEBOT is very loud during cleaning. | The main brush/side brush/roller mop is tangled, or the dust bin is blocked. | It is recommended to clean the main brush, side brush, dust bin, roller mop, etc., regularly. |
| | | DEEBOT is in Strong Suction Mode or Max Suction Power Mode. | Switch to Standard or Quiet Mode. Quiet Mode may reduce cleaning performance. |
| 8 | DEEBOT gets stuck while working and stops. | DEEBOT is tangled with objects on the floor (electrical wires, curtains, carpet fringing, etc.). | DEEBOT will try various ways to free itself. If its attempts fail, manually remove the obstacles and restart. |
| | | DEEBOT might be stuck under furniture with an entrance of similar height. | Please raise the furniture, set a physical barrier, or set a virtual boundary via the ECOVACS HOME App. |
| | | DEEBOT is stuck in a narrow area. | Tidy up your home, set a physical barrier, or set a virtual boundary via the ECOVACS HOME App. |

| No. | Malfunction | Possible Cause | Solution |
|---|---|---|---|
| 9 | During cleaning, DEEBOT may encounter issues like a disorderly route, biased movement, repeated cleaning over the same spots, and missing small areas. | A large area has not been cleaned, possibly because it was blocked. | Ensure the door is open, clear potential obstacles, such as slippers and scattered cords. DEEBOT will perform supplementary cleaning before the cleaning session is finished. |
| | | The driving wheels may slip on the ground when DEEBOT climbs steps, thresholds, and door bars, which can affect its judgment of the entire home environment. | Close the door of the room, or set a virtual boundary in the App. You can then bring DEEBOT into the room to clean it separately. |
| | | On freshly waxed or polished floors, as well as smooth tiles, there may be less friction between the driving wheels and the floor. | Please wait for the wax to dry before cleaning. |
| 10 | After returning to the OMNI station, DEEBOT does not empty its dust bin. | The Auto-Empty function has not been turned on in the App. | Turn on the Auto-Empty function in the App. |
| | | Manually moving DEEBOT back to the station will not trigger the Auto-Empty function. | It is recommended to allow DEEBOT to return to the OMNI Station on its own. Please do not manually move it. |
| | | In Do Not Disturb mode, DEEBOT will not empty the dust after returning to the OMNI Station. | Turn off Do Not Disturb in the App or manually start dust-emptying. |
| | | The station detects a decrease in empty efficiency. | Replace the dust bag according to the [REGULAR MAINTENANCE] section and close the dust collection cabin. If the dust bag is not full when prompted by the App, you can put it back again. |
| | | Check if the dust bin is full and causes a blockage. | Clean the dust bin according to the [REGULAR MAINTENANCE] section. |
| | | If the above possible causes have been ruled out, components of the station may be abnormal. | Please contact customer service for assistance. |

| No. | Malfunction | Possible Cause | Solution |
|---|---|---|---|
| 11 | Auto-Empty unsuccessful. | The station detects a decrease in empty efficiency. | Please replace the dust bag according to the [REGULAR MAINTENANCE] instructions and securely close the dust collection cabin door. If the replacement prompt appears but the bag is not full, remove, reinsert, and then properly secure the cabin. |
| | | The outlet of the dust bin is blocked by foreign objects. | Remove the dust bin and clear the foreign objects on the outlet. |
| 12 | The inner side of the dust collection cabin is dirty. | Fine particles pass through the dust bag and accumulate on the inner side of the dust collection cabin. | Clean the inner side of the dust collection cabin. |
| | | The dust bag is broken. | Check and replace the dust bag. |
| | | The dust bag is not properly installed. | Please install the dust bag properly. |
| | | The dust container cover is not closed. | Please check if the dust container cover is closed properly. |
| 13 | Dust leakage occurs while DEEBOT is working. | The outlet of the dust bin is blocked by foreign objects. | Remove the dust bin and clear the foreign objects on the outlet. |
| 14 | The roller mop does not rotate. | The roller mop is not correctly installed. | Install the roller mop properly according to the [REGULAR MAINTENANCE] section. |
| | | The roller mop is blocked by foreign objects. | Clean and install the roller mop properly according to the [REGULAR MAINTENANCE] section. |
| 15 | The driving wheel is stuck. | The driving wheel is entangled or stuck due to foreign objects. | Rotate and press the driving wheel to check for any wrapping or obstruction by foreign objects. If any foreign objects are found, please clean them promptly. If this issue persists, please contact customer service for assistance. |

| No. | Malfunction | Possible Cause | Solution |
|---|---|---|---|
| 16 | The mop washing tray is full of water and cannot be emptied. A voice prompt reports the mop washing tray malfunction. | The dirty water tank is not properly installed. | Tap down on the dirty water tank to ensure it is properly installed. |
| | | The sealing plugs in the dirty water tank are not installed properly. | Make sure that the two sealing plugs are properly installed. |
| | | The mop washing tray is not properly installed. | Check and ensure the mop washing tray is properly installed. |
| | | Check if the floating ball gets stuck when there is no water in the mop washing tray base. | Take out the mop washing tray to put the floating ball back in place. |
| | | The OMNI Station cannot drain water normally. | Place DEEBOT in the station. After ensuring it's charging, double tap ⏻. If the issue persists, please contact customer service for assistance. |
| | | The suction port of the mop washing tray is blocked by foreign objects or dirt. | Please clean the mop washing tray and its filter, and make sure the inlet is free of any foreign objects. |
| | | The voice alert persists after all the above solutions are tried. | Power off and on the station. If this issue persists, please contact customer service for assistance. |
| 17 | A loud noise occurs while the mopping pad is drying | Noise increases when the dust bin drying function is enabled | Turn off the dust bin drying function in the App |
| 18 | Malfunction of the dirty water tank heating function | The dirty water tank heating function is disabled in the App | Enable the dirty water tank heating function in the App |
| | | DEEBOT is performing other tasks during the scheduled dirty water tank heating period, such as cleaning, drying, or charging | Manually adjust the heating schedule of the dirty water tank in the App, and confirm no tasks will run within this timeframe |
| | | Residual water at the bottom of the dirty water tank causes a short circuit, prompting the Station to cut power for protection | 1. Inspect the exterior bottom of the dirty water tank and the matching contact springs on the Station for residual moisture. Wipe away any water with tissue paper to prevent short circuiting from occurring during heating.<br>2. When emptying wastewater from the dirty water tank or cleaning its surface on a daily basis, keep the tank's exterior bottom completely dry. Do not let the bottom come into direct contact with water to lower the risk of potential heating faults. |

**Please contact our customer service for assistance if the problem persists despite the recommended solutions.**

# TECHNICAL SPECIFICATIONS

| | | | |
|---|---|---|---|
| Model | **ZJ2570** | | |
| Rated Input | 17.8 V ⎓ 2 A | Fast Charge Input | 16.4 V ⎓ 10.5 A |
| Charging Time | about 2.5 h | | |
| Station Model | **CH2620** | | |
| Station Rated Input | 220-240 V ∼ 50-60 Hz/0.5A | | |
| Station Nominal Rated Output | 17.8 V ⎓ 2 A | Fast Charge Output (Short Time) | 16.4 V ⎓ 10.5 A |
| Rated Input Current (Charging) | 2 A | Power (Emptying) | 400 W |
| Power (Hot Water Washing Mop) | 360W | | |
| Power (Dirty Water Tank Heating) | 90W | | |
| Frequency Bands | 2400-2483.5 MHz | | |
| Networked Standby Power | Less than 2.00W | | |

The output power of the wireless module is less than 100 mW.
Note: Technical and design specifications may be changed for continuous product improvement.
Explore more accessories at https://www.ecovacs.com.

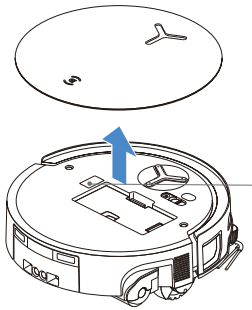

**Please use the mobile camera to scan the QR code and obtain the user guide.**

## 重要安全指示

### 重要安全指示

使用電器時，應始終遵守基本預防措施，包括以下：

### 使用本設備之前請先閱讀所有指示
### 保存這些指示

1. 本設備不適合身體、感官或金屬能力有缺陷或缺乏經驗與知識的人（包括兒童）使用，除非他們是在負責其安全的人員監督或指導下使用本設備。
2. 應監督兒童以確保他們不玩弄本設備。
3. 清理要清掃的區域。從地板上移除可能纏繞住本設備的電源線和小物品。將地毯邊緣塞到地毯底布下方，並使窗簾和桌布等物品懸空於地面上。
4. 若有台階或樓梯會導致本設備從清掃區域摔落，您應該操作設備，確保它可以偵測到台階而不會越過邊緣掉落。可能需要在邊緣放置物理屏障以防止設備掉落。確保物理屏障沒有絆倒危險。
5. 只能按照本手冊中的說明使用。僅可使用製造商推薦或銷售的附件。
6. 僅供家庭「室內」使用。請勿在室外、商業或工業環境中使用本設備。
7. 請勿在未安裝集塵盒和 / 或濾芯的情況下使用。
8. 請勿在點燃蠟燭或有易碎物的區域中操作本設備。
9. 讓頭髮、寬鬆衣服、手指和身體所有部位遠離任何開口和移動零件。
10. 請勿在極熱或極冷（低於 0° C/32° F 或高於 40° C/104° F）的環境中使用和存放本設備。請在高於 0° C/32° F 且低於 40° C/104° F 的溫度下為機器人充電。
11. 請勿在嬰兒或兒童睡覺的房間內操作本設備。
12. 請勿在潮濕或積水的表面上使用本設備。
13. 請勿讓本設備撿拾大型物品，如石頭、大片紙張或任何可能堵塞本設備的物品。
14. 請勿使用本設備撿拾易燃或可燃的材料，如汽油、印表機或影印機碳粉，或在可能存在這些材料的區域內使用。
15. 請勿使用本設備撿拾任何燃燒中或冒煙的物品，如香煙、火柴、熱灰燼或任何可能引起火災的物品。
16. 請勿將物品放進吸塵進氣口中。如果吸塵進氣口堵塞，請勿繼續使用。保持進氣口乾淨，沒有被灰塵、棉絨、頭髮或任何可能減少氣流的東西阻塞。
17. 如果電源線損壞，必須由製造商或其服務代理商更換，以避免發生危險。

18. 在清潔或維護本設備之前, 請先關閉電源開關。
19. 適用於 CH2620 的鋰電池類型為最多 4 個電池芯、最大額定電壓 DC 14.4V、額定容量 3,600mAh。在棄置本設備之前，必須先根據當地法律規範取出並丟棄電池。
20. 請根據當地法律規範來處理廢舊電池。
21. 即使本設備嚴重損壞，也不要焚燒本設備。電池可能會在火中爆炸。
22. 務必按照本操作手冊中的指示使用本設備。Ecovacs Home Service Robotics 不對因使用不當造成的任何損害或傷害承擔責任或義務。
23. 機器人含有只能由技術人員更換的電池。若要更換機器人電池，請聯絡客戶服務中心。
24. 請確保您的電源電壓符合全能基站上標記的電源電壓。
25. 僅可使用製造商提供的原裝充電電池和本設備隨附的全能基站。禁止使用不可充電的電池。
26. 請小心不要損壞電源線。請勿使用電源線來拉動或搬移本設備或全能基站、將電源線當作提把、關門夾住電源線，或在鋒利的邊緣或角落處拉扯電源線。請勿讓本設備行經電源線上方。讓電源線遠離高溫表面。
27. 如果全能基站損壞，請勿繼續使用。如果電源裝置損壞或有缺陷，則不得修理，也不得繼續使用。
28. 請勿使用損壞的電源線或插座。如果本設備或全能基站運作不正常、曾經摔落、已損壞、被留在室外或接觸水, 請勿繼續使用。為避免危險，必須由製造商或其服務代理商進行維修。
29. 在清潔或維護全能基站之前，必須先從插座上拔下插頭。
30. 若要棄置本設備，請從全能基站中取出設備，並先關閉設備的電源開關，再取出電池。
31. 如果長時間不使用全能基站，請拔下插頭。
32. 如果長時間不使用機器人，請關閉機器人電源後存放，並拔下全能基站的插頭。
33. 警告：僅可將清水添加到清水桶中。
34. 警告：為電池充電時，請僅使用本設備隨附的可拆卸電源裝置 CH2620。

為滿足射頻暴露要求，在本設備運作期間，本設備與人員之間應保持 20 公分或更大的間隔距離。

為確保合規性，建議不要在小於此距離的範圍內進行操作。用於此發射器的天線不得與任何其他天線或發射器位於同一處。

## 裝置更新

通常，有些裝置會每兩個月更新一次，但不一定總是如此明確。
特別是銷售時間超過三年以上的部份裝置，僅會在出現重大弱點需要修正時才會進行更新。

| | |
|---|---|
|  | 注意：高溫表面 |
|  | 防短路的安全隔離變壓器 |
|  | 切換模式電源 |
|  | 僅供室內使用 |
|  | 直流電 |
|  | 交流電 |
|  | 充電之前，請先閱讀指示。 |
|  | 充電埠的極性 |
|  | 延時微型熔斷器 |
|  | 第 II 類 |



## 正確棄置本產品

此標誌表明本產品在整個歐盟範圍內均不得與其他生活垃圾一起丟棄。為防止不受控制的廢棄物處置可能會對環境或人類健康造成危害，請負責任地回收廢棄物，使材料資源可以永續再利用。若要回收您用過的設備，請使用當地的資源回收系統，或聯絡您當初購買本產品的零售商。他們可以安全地回收本產品。

# 產品概述

## ❶ 產品圖解

### 1. DEEBOT 正面圖

DEEBOT 上的按鈕：
點選：切換開始 / 暫停
按住 3 秒：返回基站

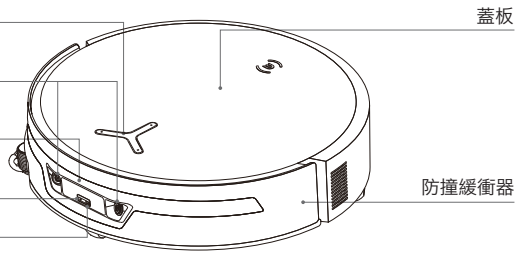


### 2. DEEBOT 底部圖

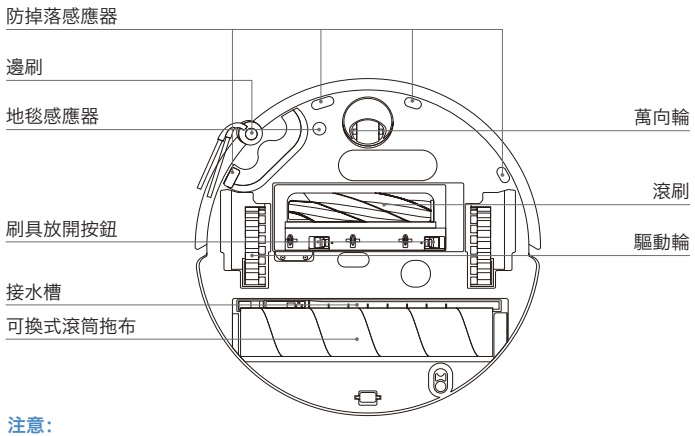


**注意：**
* 本手冊中的數據僅供參考，可能與實際設備有所不同。

### 3. DEEBOT 內部（蓋板下方）

重設鍵
**網路設定：** 按下重設鍵，會聽到語音提示將 DEEBOT 連接到 App。
**還原預設設定：** 按住重設鍵 5 秒。聽到語音提示後，將會播放開機音樂，並將 DEEBOT 還原至預設設定。請謹慎使用此功能。

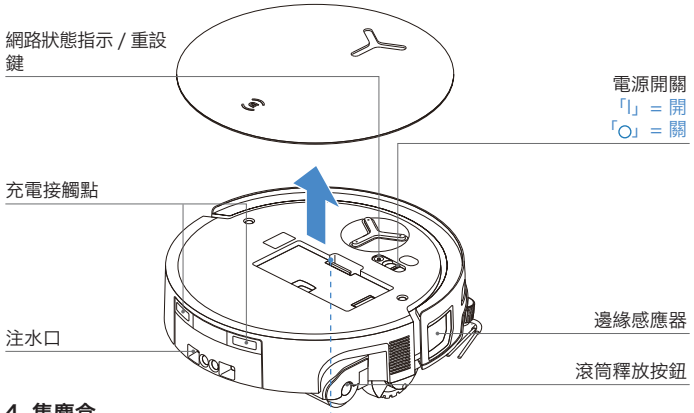


### 4. 集塵盒

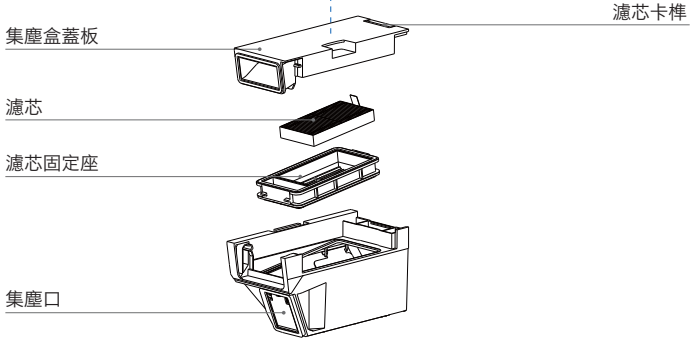

## 5. 全能基站正面圖

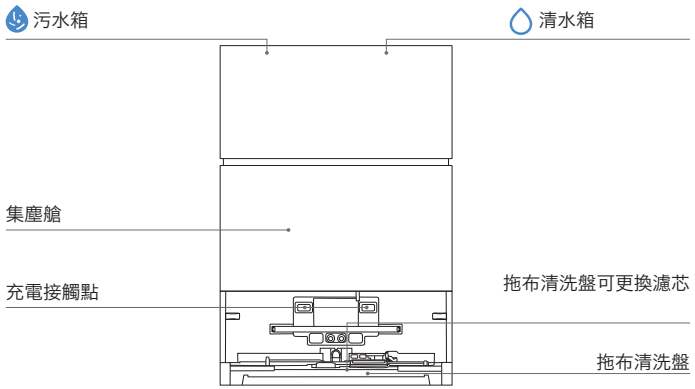


## 6. 全能基站背面圖

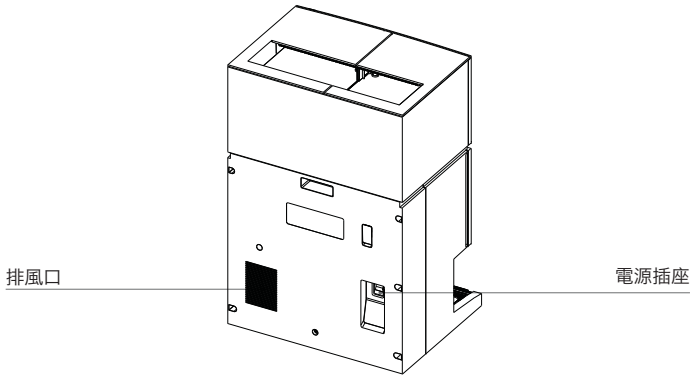


## 7. DEEBOT 上的指示燈

| 燈光效果 | 狀態 |
|---|---|
| 白色呼吸燈 | 充電 |
| 白燈長亮 | 充滿電 / 運作中 |
| 紅燈長亮 | 電池電量不足 |
| 閃爍紅燈 | DEEBOT 警報 |
| 閃爍橘燈 | 基站警報 |

注意：

- 閃爍橘燈或紅燈：請檢查 App 以瞭解故障原因。
- 如果 DEEBOT 無法充電，請用乾淨的乾布擦拭充電接觸點。

## 8. 感應器概述

| 名稱 | 功能說明 |
| --- | --- |
| 導航模組 | 雷射光測距技術會根據反光時間差來測量 DEEBOT 與周圍物體之間的距離，使模組能夠在 DEEBOT 移動時根據周圍物體建立地圖。偵測範圍為 10 公尺。 |
| 障礙迴避模組 | 紅外線測距技術和三角形推算法可用於測量周圍物體與 DEEBOT 之間的距離。當感應器偵測到附近有物體時，DEEBOT 會自動轉彎以避免撞到物體。偵測範圍為 0.3 公尺。 |
| 防掉落感應器 | 利用飛行時間（dToF）原理，位於 DEEBOT 底部的 dToF 感應器可連續測量 DEEBOT 與地面之間的距離。同時，底部的紅外線感應器也會使用紅外線測距技術來偵測距離。當前方有樓梯時（如白色表面高度 ⩾ 55 公釐，或黑色表面高度 ⩾ 30 公釐時），如果識別出的高度超過預設高度，則 DEEBOT 不會向前移動，進而能夠實現防摔功能。 |
| 地毯偵測感應器 | 感應器會發射 300 kHz 的超音波，其能量將被地毯吸收，導致回音能量低於閾值。使 DEEBOT 能夠偵測到地毯的存在。在 ECOVACS 實驗室中，可以識別市場上 50 多種類型的地毯。 |
| 防撞感應器 | 利用光耦合器開關的原理，DEEBOT 會在即將發生碰撞時避開障礙物。 |
| 邊緣感應器 | 利用紅外線測距技術，邊緣感應器可偵測 DEEBOT 與側面物體之間的距離。當右側有牆壁或障礙物時，DEEBOT 會進行沿邊清掃，以避免遺漏任何定點並防止碰撞。 |
| AIVI 攝影機 | 利用 AI 智慧分析進行環境感測與高效影像管理（僅適用於部分型號）。 |
| 麥克風 | 麥克風透過人聲穿透空氣引起的振膜振動來擷取聲音。這使得錄音和語音控制功能可以透過採集聲音模型和演算法來指導 DEEBOT 完成指派工作。有效喚醒距離為 5 公尺。 |

# 初始設定和使用

## ❶ 清掃前的注意事項

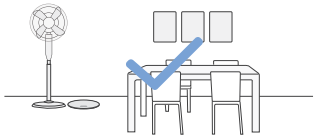

### 整理要清掃的區域

為了盡可能最大化清掃區域，請在使用 DEEBOT 之前先將桌子、椅子和直立風扇等傢俱放在適當的位置，並收起體重計等位於低處的物品。

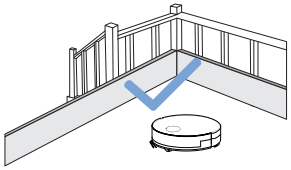

### 防止 DEEBOT 掉落

在易摔落的邊緣處放置物理屏障，例如樓梯和台階，以防止 DEEBOT 越過邊緣掉落。

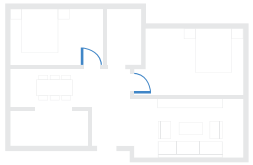

### 打開房門，協助 DEEBOT 探索

打開所有房門，協助 DEEBOT 在第一次使用時就能充分探索您的房子。

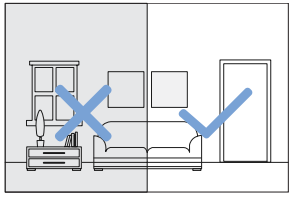

### 提供充足的照明

確保所有清掃區域光線充足，以支援 DEEBOT 的閃避障礙物模組準確避開鞋子、襪子和繩索等障礙物。



清除地板上的物品，包括電纜、衣服和拖鞋，以提高清掃效率。



在邊緣有流蘇的地毯上使用本產品之前，請先將流蘇摺入地毯下方。



請勿站在狹窄的空間，例如走廊，以避免擋住導航模組。



確認 DEEBOT 視線的清晰度，避免指甲或油漬刮傷或弄髒閃避障礙物模組鏡頭。使用乾淨的軟布擦拭攝影機，不要使用清潔劑、洗滌劑或噴霧劑。

## ❷ 快速入門

使用設備之前，請先取下所有保護材料。

### 1. 基站安裝

「咔嚓」一聲表示安裝正確。

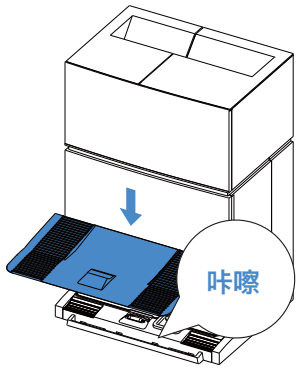


### 2. 組裝和放置基站

將全能基站靠牆放在平坦堅硬的表面上。請勿將物品放在兩側 0.05 公尺和前方 0.8 公尺的範圍內。

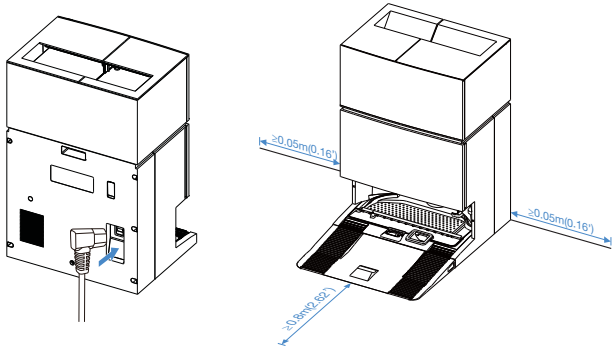


**注意：**

- 如果基站附近有鏡子和會反光的踢腳線等反光物體，則應覆蓋住此類物體的底部 14 公分。
- 請勿將基站放在陽光直射或高溫環境中。
- 將基站放在 Wi-Fi 訊號良好的位置，以獲得更好的使用者體驗。

## ❸ 下載 ECOVACS HOME App

**若要享受所有可用功能，建議您透過 ECOVACS HOME App 來控制您的 DEEBOT。**

掃描蓋板下方的 QR Code 下載 ECOVACS HOME App。

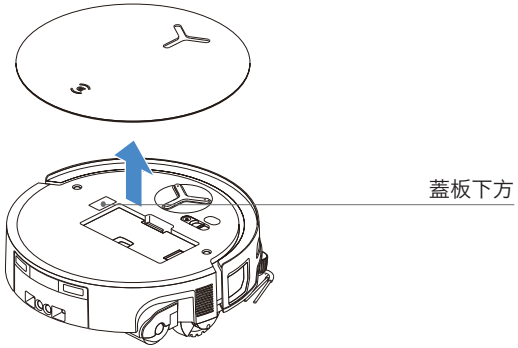


也可以在 App Store 或 Google Play 中搜尋「ECOVACS HOME」，下載 ECOVACS HOME App。




附註：依照 App 的指示完成註冊、登入及連線。

## ❹ 將 DEEBOT 連接到 APP

開啟 DEEBOT，在 App 中點選 或 掃描以新增機器人 ，然後依照指示開始進行網路設定。

**Wi-Fi 網路要求：**
- 您應該使用 2.4 GHz 或 2.4/5 GHz 混合式網路。
- 您的路由器可支援 802.11b/g/n 和 IPv4 通訊協定。
- 請勿使用 VPN（虛擬私人網路）或 Proxy 伺服器。
- 請勿使用隱藏的網路。
- 使用 TKIP、PSK、AES/CCMP 加密技術的 WPA 和 WPA2。
- 不支援 WEP EAP（企業身份驗證通訊協定）。
- 在北美地區，請使用 Wi-Fi 頻道 1-11，在北美以外地區則使用 1-13 頻道（請諮詢當地監管機構）。
- 如果您使用網路延伸器 / 中繼器，則網路名稱（SSID）和密碼必須與主網路相同。
- 請在路由器上啟用 WPA2。

### Wi-Fi 指示燈

| | | |
|---|---|---|
|  | 白燈慢閃 | 已斷開 Wi-Fi 連線 |
| | 白燈快閃 | 連線中 |
| | 白燈長亮 | 已連線 Wi-Fi |

請注意，遠端開機、語音互動、2D/3D 地圖顯示和控制設定、以及個人化清掃（取決於設備）等智慧功能，需要使用 ECOVACS HOME App，且此應用程式會不斷更新。您需要同意我們的隱私權政策和使用者協議，以便我們可以處理您的一些基本必要資訊，之後您就可以使用 App 的某些功能來控制本設備。如果您不同意我們的隱私權政策和使用者協議，將無法使用這些功能。但是，您仍然可以使用此設備的基本功能進行手動操作。

**網路介面資訊**

| 名稱 | 說明 |
|---|---|
| 紅外線介面 | 紅外線介面預設為關閉，並在 DEEBOT 位於充電座時啟動。當 DEEBOT 在充電站時，它會透過紅外線介面與充電站通訊。 |
| 藍牙 | 在網路設定過程中，啟用藍牙以將 DEEBOT 連接到網路。藍牙使用 GAP1800、GATT 1801、8888 服務進行安全的組態配置和資料互動。 |
| Wi-Fi* | 促進 App 和 DEEBOT 之間的資料傳輸，以便透過 App 控制 DEEBOT。 |
| ECOVACS HOME App | ECOVACS 產品提供智慧功能，例如網路設定、建立地圖和清掃模式選擇（具體視每項產品而定）。若要使用這些功能，使用者需要下載並使用官方 ECOVACS HOME App。 |

* DEEBOT 系列掃地機器人專為家庭清掃場景而設計。運作時需要使用家庭 Wi-Fi 網路，並需要使用者透過路由設定來配置 DDoS 防護。

## ❺ DEEBOT 開啟電源和充電

將主機移回基站。語音提示「開始充電」表示成功對接並充電中。在 ECOVACS HOME App 中建立地圖後，即可開始使用主機。

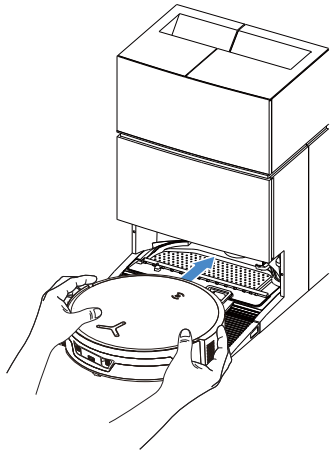

**注意：**

- DEEBOT 關閉電源時無法充電。
- 清掃之後，建議保持 DEEBOT 電源開啟和充電狀態，以確保為下一次清掃做好準備。
- 為確保 DEEBOT 在清掃後能夠順利返回充電，請從基站開始清掃，並避免在此過程中移動基站。

## ❻ 加滿清水箱

取出清水箱，打開水箱蓋，將水箱注滿水。關閉水箱蓋，重新裝回清水箱。

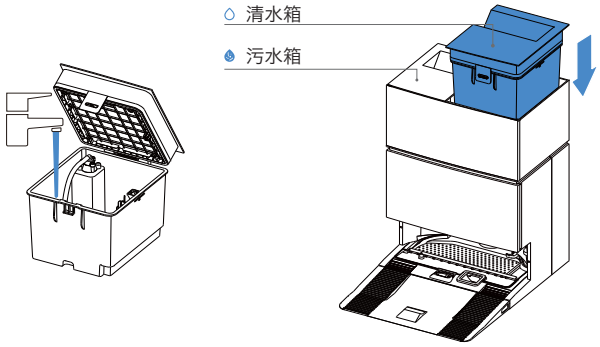


**注意：**

- 僅可使用 ECOVACS DEEBOT 清潔液以避免故障。
- 放入水箱就定位之前，請先使用乾淨的乾布擦去水箱表面的任何水分。
- 使用之前請務必鎖緊兩個水箱的蓋板。
- 水箱中的任何水痕來自於功能測試， 請放心使用。

## ❼ 注入清潔液

1. 取下集塵艙外蓋，向外拉出兩個清潔液盒，並將其放置在平坦、堅硬的地面上。

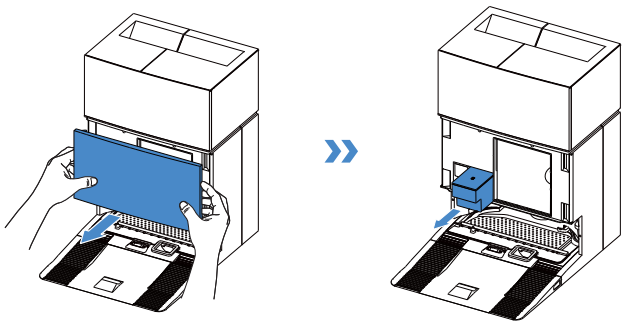

2. 將清潔液倒入藍盒中，重污清潔液倒入黑盒中。固定箱蓋後，將它們推回基站並關閉水箱蓋。

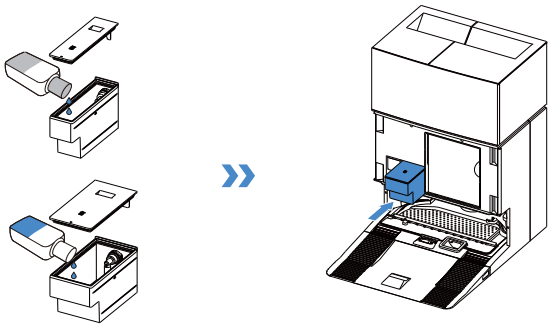

**注意：**請勿將清潔液倒入清水箱中。將它添加到清潔液水箱中。否則，濃度比例不正確可能會導致泡沫過多並降低清潔效果。

3. 放回集塵艙外蓋，用力按壓蓋子將其固定到位。

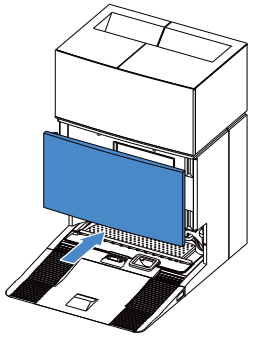

**注意：**

- 不要將清潔液裝得太滿，否則固定蓋子時可能會溢出。如果您不經常使用地板清潔液，則可以跳過此步驟，並且可以在 App 中停用自動清潔液投放功能。
- 為了提升性能和延長產品壽命，請使用 ECOVACS DEEBOT 清潔液。
- 請確保沒有異物掉入清潔液盒中。

## ⑧ 操作 DEEBOT 進行清掃

### 1. 開始建立地圖

第一次建立地圖時，請跟隨 DEEBOT 以幫助它解決一些問題。
例如，DEEBOT 可能會卡在傢俱下方。請參考以下解決方法：
① 如果可能，請抬高放在低處的傢俱；
② 蓋住傢俱的底部；
③ 透過 App 設定虛擬邊界。

### 2. 開始清掃

- DEEBOT 的水箱會透過基站自動加水。不需要手動重新填充。
- 拖地時，DEEBOT 會識別地板類型，並在遇到地毯時自動抬高拖布。請勿在長毛地毯或毛毯上使用 DEEBOT。建議在清掃過程中摺疊長毛地毯，或是在 App 中設定虛擬邊界，將該地毯區域設為禁入區域。

首次清掃之前，請確保 DEEBOT 位於基站內並已充滿電。按住 DEEBOT 上的 ⏻ 以開始。您也可以使用 ECOVACS HOME App 或語音控制來啟動。

### 3. 暫停

按住 DEEBOT 上的 ⏻ 可在其運作時暫停。您也可以使用 ECOVACS HOME App 或語音控制來暫停 DEEBOT。

### 4. 喚醒

暫停片刻後，DEEBOT 上的所有指示燈都會熄滅。若要喚醒 DEEBOT，請按 ⏻。

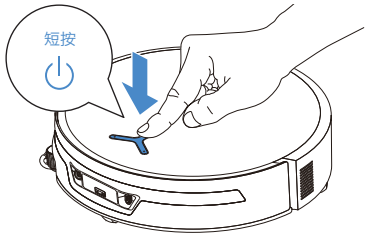


### 5. 返回基站

使用 ECOVACS HOME App 或語音控制來喚回 DEEBOT，或按住 DEEBOT 上的 ⏻ 按鈕 3 秒，讓 DEEBOT 停靠充電。

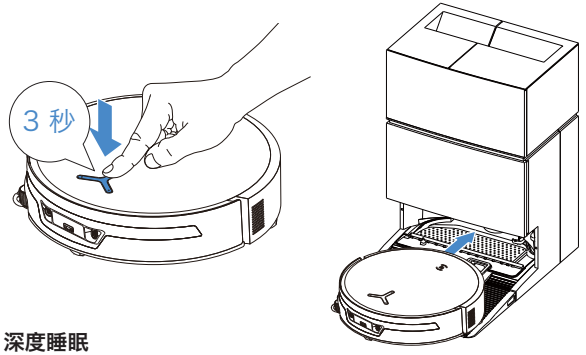


### 6. 深度睡眠

如果 DEEBOT 在基站外停留約 10 小時，它將進入深度睡眠以保護電池。請關閉電源後再打開，以喚醒 DEEBOT。

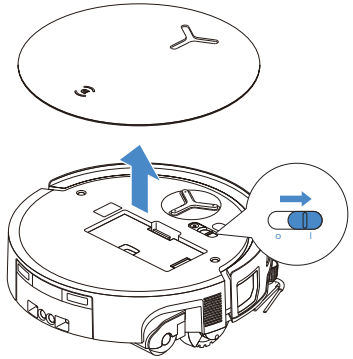

DEEBOT 在執行任務期間返回基站時，系統預設會啟動瞬快超充功能，耗時約 5 分鐘。然後切換至標準充電，並在充滿電後自動停止。

# 定期維護

## ❶ 維護頻率

為使 DEEBOT 保持最佳性能，請依照以下頻率進行維護和更換零件：

| 零件 | 維護頻率 | 更換頻率 |
|---|---|---|
| 可換式滾筒 | / | 每 1-2 個月 |
| 接水槽 | 每週 | / |
| 集塵袋 | / | 當 App 提示時 |
| 邊刷 | 每 2 週 | 3-6 個月 |
| 滾刷，滾刷外蓋 | 每週 | 每 6-12 個月 |
| 濾芯 | 每週 | 3-6 個月 |
| 萬向輪<br>防掉落感應器<br>防撞緩衝器<br>DEEBOT 上的充電接觸點<br>全能基站上的充電接觸點<br>導航模組<br>閃避障礙物模組 | 大約每個月 | / |
| 清水箱 | 每 3 個月 | / |
| 污水箱 | 每個月 | / |
| 基站機體和底部 | 每個月 | / |
| 拖布清洗盤可更換濾芯 | 每 2 週 | / |
| 清潔液裝置 | 每個月 | / |

**注意：**更多配件請瀏覽 ECOVACS HOME App 或 https://www.ecovacs.com。

## ❷ DEEBOT 維護

### 1. 維護集塵盒和濾芯

1. 取出集塵盒，然後清空。

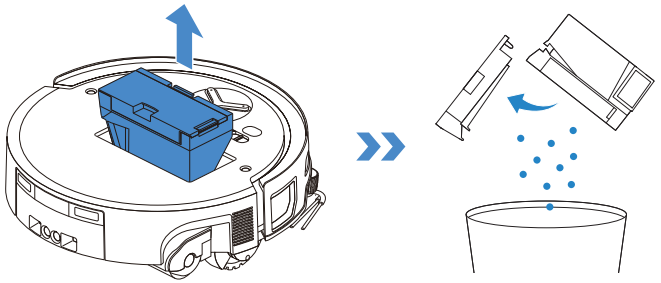

2. 打開濾網，取出濾芯。

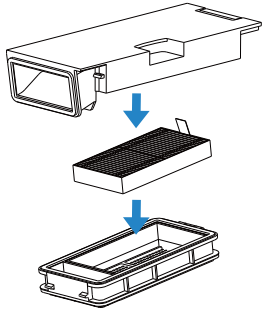

3. 用水沖洗集塵盒和濾芯，甩掉水滴。

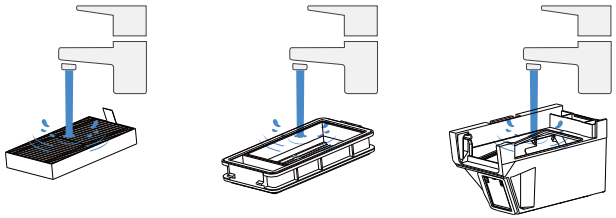

**注意：**
- 請用水沖洗濾芯，如圖所示。
- 請勿用手指或刷子清潔濾芯。

4. 風乾集塵盒和濾芯。

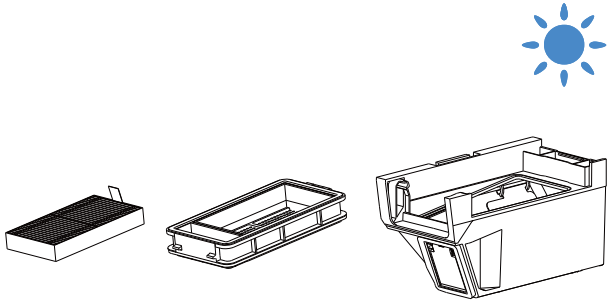

**注意：** 使用之前請讓元件完全乾燥。

## 2. 維護滾刷和邊刷

### 清潔滾刷

1. 取下滾刷的外蓋。

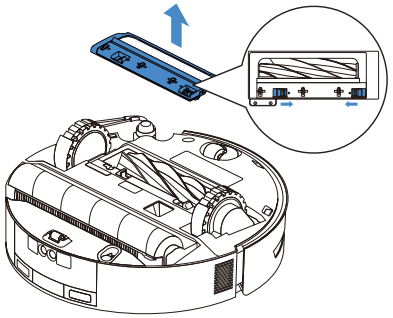

2. 取下並清潔滾刷及其刷槽。

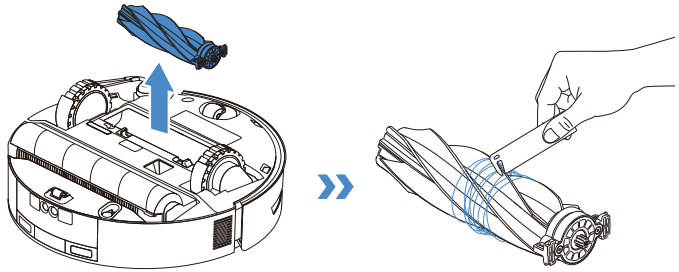

3. 安裝滾刷和外蓋。

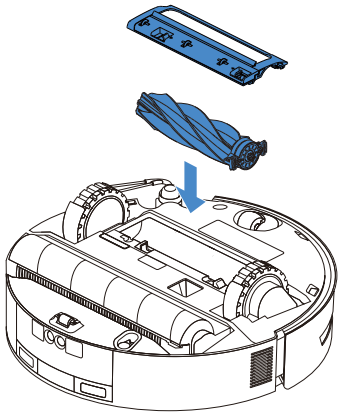

**清潔邊刷**

用螺絲起子取下邊刷並清潔。

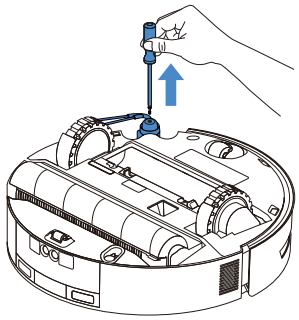

## 3. 維護滾筒元件

**清潔滾筒拖布**

1. 按下滾筒拖布側邊的滾筒釋放按鈕，輕輕抬起並取下滾筒拖布。

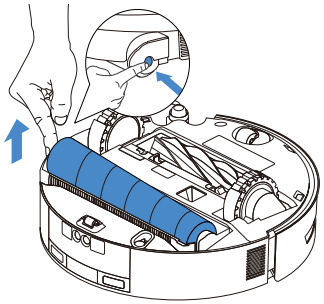

2. 取下滾筒端蓋，清潔並擰乾滾筒拖布。用擰乾的濕布擦拭滾筒槽。

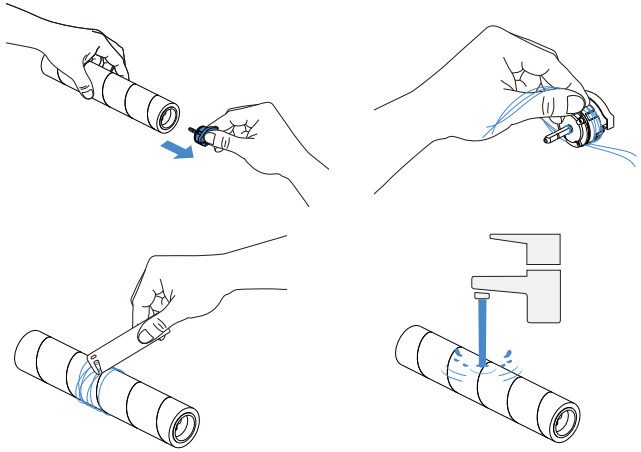

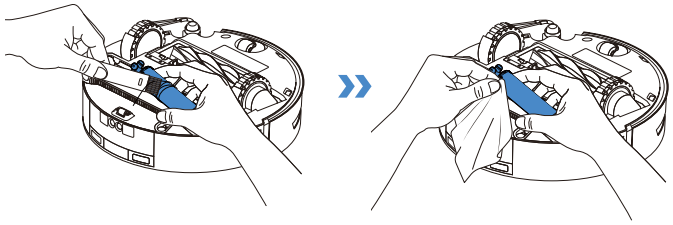

**注意：**
- 清掃時請勿用力拉扯滾筒馬達元件，以免損壞。
- 請勿用水沖洗 DEEBOT。

3. 重新安裝滾筒端蓋，並將滾筒拖布連接到馬達上。拖布就位後，將滾筒釋放按鈕對準滾筒槽側邊的凹槽，然後向下按壓。聽到「咔嚓」一聲表示拖布已正確安裝。

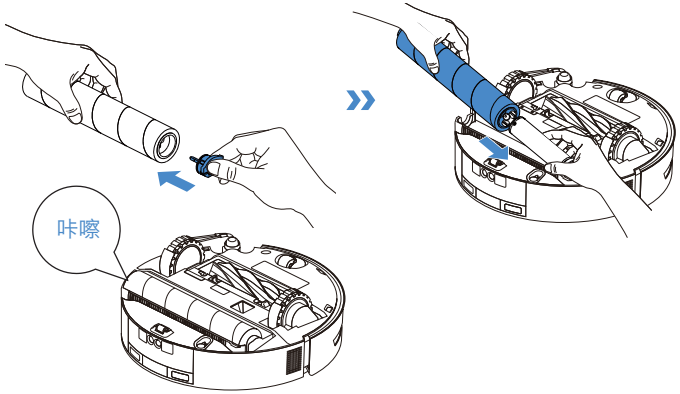


**注意：**更多配件請瀏覽 ECOVACS HOME App 或 https://www.ecovacs.com。

## 4. 維護接水槽

### 清潔接水槽

1. 向上推動釋放按鈕以取下接水槽，接著將其清潔並擦乾。

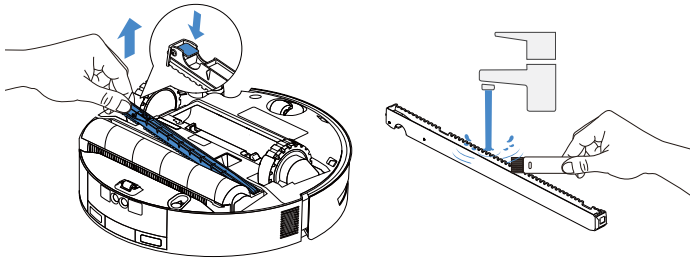

**注意：**如果 DEEBOT 未處於乾燥模式，則翻轉 DEEBOT 時可能會漏出少量殘留水。

2. 重新安裝接水槽，並用力向下按壓直到其安裝到位。

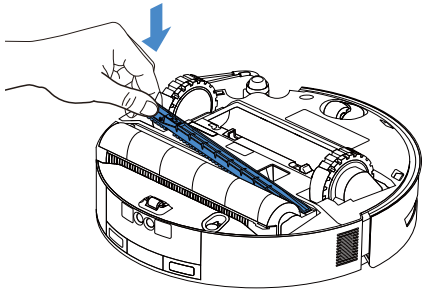

## 5. 清潔滾筒拖布外蓋

1. 取下滾筒拖布後，將滾筒拖布外蓋釋放開關向右滑動以解鎖。

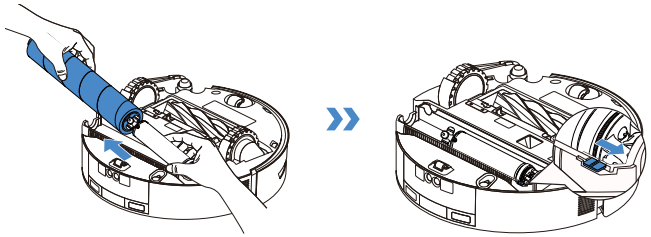

2. 抓住滾筒拖布外蓋在滾筒槽上的凹槽，然後輕輕扭動並將其取下。

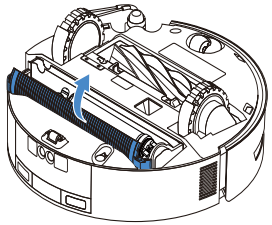

3. 將滾筒拖布外蓋清潔並晾乾後，將其軸心與滾筒槽左側的軌道對齊，重新安裝，並鎖定釋放開關。

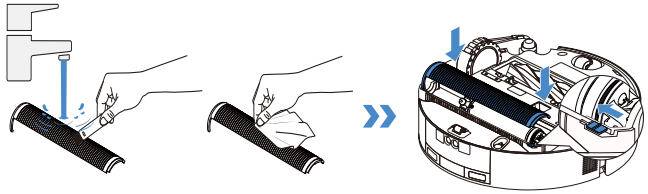

## 6. 維護其他元件

**清潔防掉落感應器**

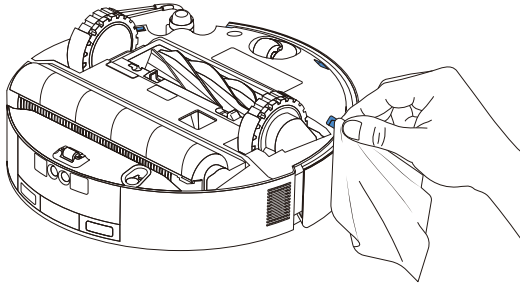

**清潔萬向輪**

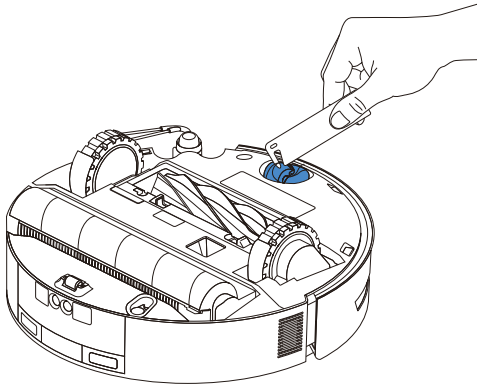

**清潔驅動輪**

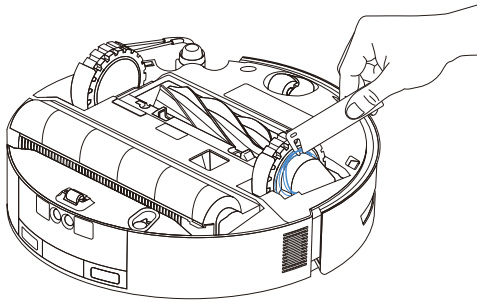

**清潔閃避障礙物模組鏡片**

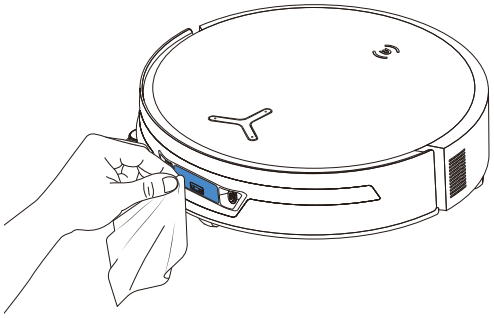

**清潔邊緣感應器**

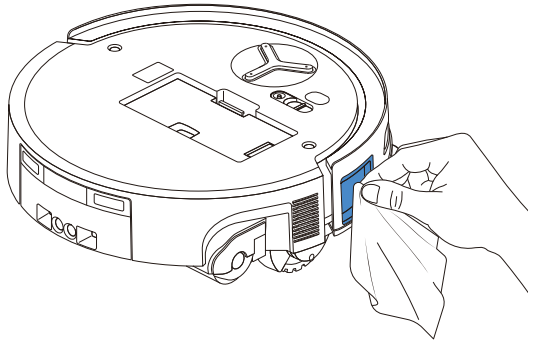

**清潔防撞緩衝器**

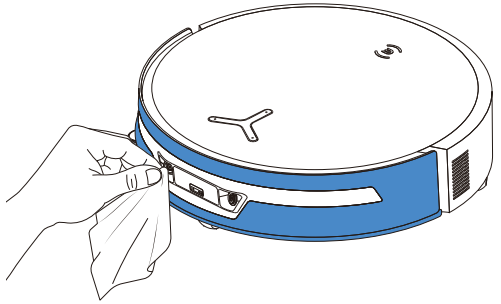

### 清潔導航模組

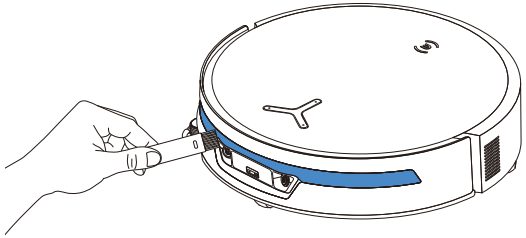

### 清潔充電接觸點

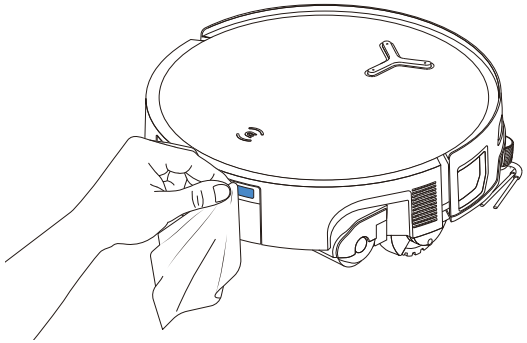

**注意：**

•用乾淨的乾布擦拭元件。切勿使用濕布。請勿使用清潔噴霧劑或洗滌劑，因為濕氣可能會造成損壞。

•充電接觸點包含敏感的電子元件。請用乾布清潔它們。請勿使用濕布，以免進水損壞。

## ❸ 基站維護

### 1. 維護集塵盒

1. 取下集塵艙外蓋。

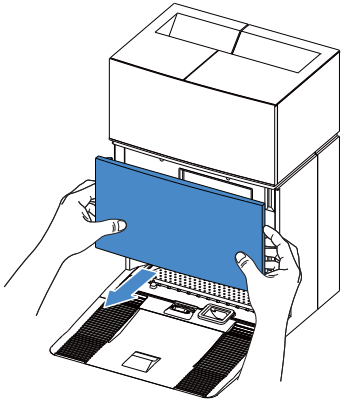

2. 依照箭頭方向取出拋棄式集塵袋。

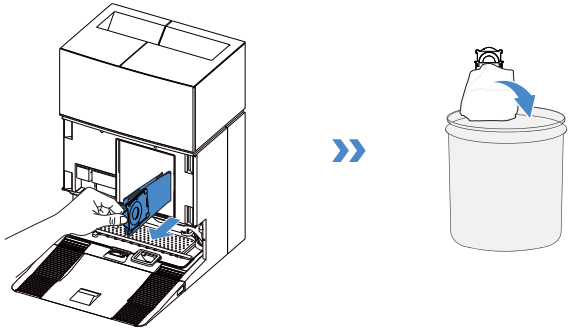

**注意：** 握住提手再將集塵袋向上提起，可有效防止灰塵外漏。

3. 用乾布將集塵桶擦拭乾淨後，再裝入新的集塵袋。

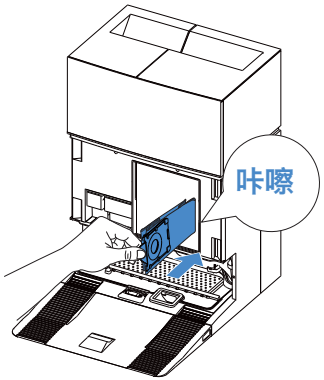


4. 將集塵桶外蓋的頂部卡榫插入槽中，然後向下按壓，確保正確密封。

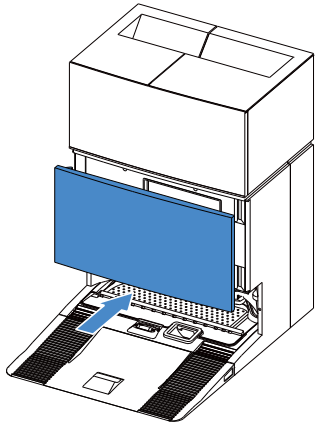

## 2. 維護拖布清洗盤

1. 取下並清潔基站底座。

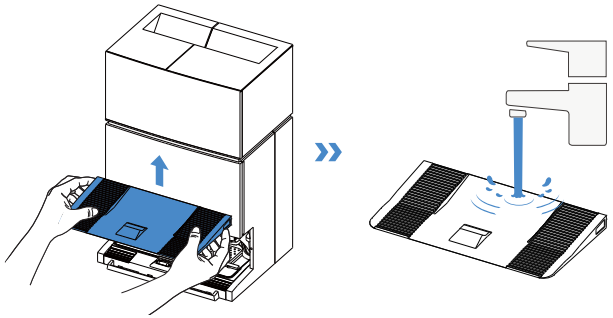

2. 取下拖布清洗盤。按下清洗盤上的卡榫，即可拆卸可更換濾芯進行清洗。

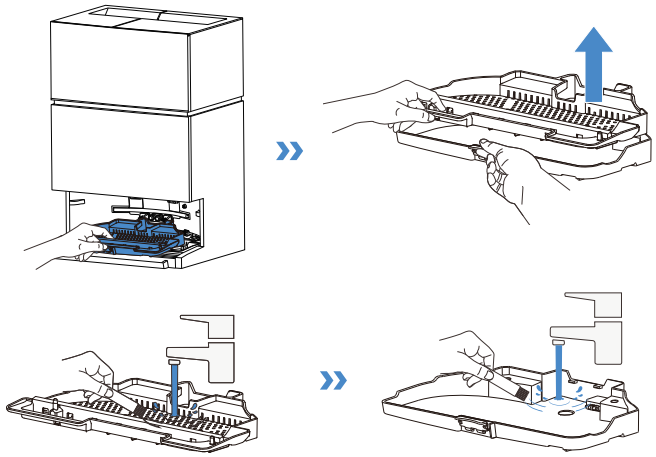

3. 依序重新安裝拖布清洗可更換濾芯、托盤和基站底座。「咔嚓」一聲表示已牢固就位。

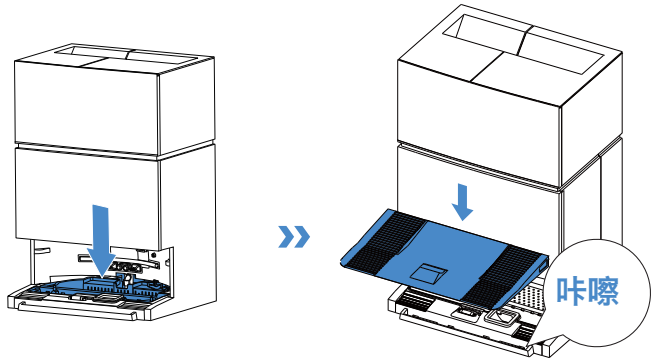


**注意：**請在使用前正確安裝。

## ④ 存放

存放之前請先充滿電，然後關閉 DEEBOT 電源。請每 1.5 個月充電一次，以防止電池過度放電。

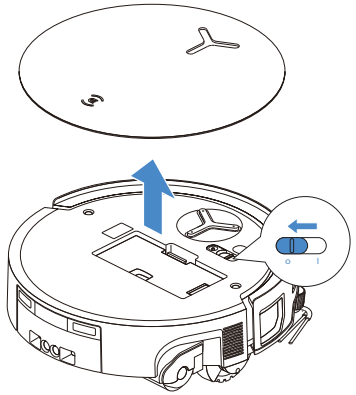

請注意，DEEBOT 關閉電源時無法充電。

**注意：**

- DEEBOT 完成清掃任務之後，建議不要關閉電源，而是保持充電狀態，以便更好地為下一次清掃做準備。
- 如果電池過度放電或長時間不使用，DEEBOT 可能會無法充電。

請聯絡 ECOVACS 尋求協助。請勿自行拆解電池。

- 如果您長時間不使用 DEEBOT，請使用 App 中的裝置「重新定位」功能排空 DEEBOT 內部的清水，保持基座水箱清空，並保持滾筒拖布乾燥。

# 疑難排解

**針對以下可能發生的問題，請參考相應的解決方法。**

| No. | 故障異常 | 可能原因 | 解決方法 |
|---|---|---|---|
| 1 | DEEBOT 無法連接到 App。 | 輸入的 Wi-Fi 使用者名稱或密碼不正確。 | 輸入正確的 Wi-Fi 使用者名稱和密碼。 |
| | | DEEBOT 不在您的家用 Wi-Fi 訊號範圍內。 | 確保 DEEBOT 位於您的家用 Wi-Fi 訊號範圍內。最好盡量靠近路由器。 |
| | | DEEBOT 未處於組態設定狀態。 | 按下重設鍵，透過藍牙將 DEEBOT 連接到您的手機。如果失敗，請按重設鍵 + ⏻，然後透過 App 連接。 |
| | | Wi-Fi 清單中沒有家用 Wi-Fi。 | 檢查 Wi-Fi 名稱是否包含特殊字元。請勿使用特殊字元, 如！@#& ¥%/\。請勿使用 5 Ghz 網路。 |
| | | 安裝的 App 不正確。 | 請下載並安裝 App。 |
| 2 | 無法在 App 中建立傢俱地圖。 | 在清掃時移動 DEEBOT 可能會導致地圖遺失。 | 清掃時，請勿移動 DEEBOT。 |
| | | 自動清掃未完成。 | 確保 DEEBOT 在清掃後自動返回全能基站。 |
| | | 建立第二張地圖時，未啟用多樓層模式。 | 請在 App 中啟用多樓層模式。 |
| 3 | 邊刷在使用過程中脫落。 | 未正確安裝邊刷。 | 用螺絲起子安裝邊刷時，請確保螺絲擰緊牢固。 |
| 4 | 找不到訊號。無法返回基站。 | 全能基站放置不正確。 | 依照 [DEEBOT 開啟電源和充電 ] 章節中的指示正確放置基站。 |
| | | 基站沒電或已被移動。 | 檢查全能基站是否已連接到電源。請勿移動全能基站。 |
| | | DEEBOT 沒有從全能基站開始清掃。 | 建議讓 DEEBOT 從全能基站開始清掃。 |
| | | 停靠路線被擋住。例如，放置全能基站的房門是關閉的。 | 保持充電路線暢通。 |

| No. | 故障異常 | 可能原因 | 解決方法 |
| --- | --- | --- | --- |
| 5 | DEEBOT 在完成清掃之前返回全能基站。 | 房間太大了，DEEBOT 需要回來充電。 | 請啟用自動復掃。如需更多詳細資訊，請依照 App 指示操作。 |
| | | 在高度複雜的居家環境中，清掃效率可能會降低，導致漏掃。 | 簡化您的居家環境。 |
| 6 | DEEBOT 無法充電。 | DEEBOT 未開啟電源。 | 打開 DEEBOT 電源。 |
| | | DEEBOT 的充電接觸點未連接到全能基站的充電接觸點。 | 請確保 DEEBOT 的充電接觸點已連接至基站的充電接觸點，並且 ⏻ 開始閃爍。檢查 DEEBOT 和全能基站的充電接觸點是否髒污。請依照說明書中 [ 定期維護 ] 一節的指示清理這些零件。 |
| | | 全能基站未連接電源。 | 1. 確保全能基站已連接電源。<br>2. 連接電源之後，確保能聽到馬達開機音效。 |
| | | 底座尚未安裝到位。 | 請參閱 [ 準備工作 ] 一節進行正確安裝。 |
| 7 | DEEBOT 在清掃過程中聲音很大。 | 滾刷 / 邊刷 / 滾筒拖布被異物纏住了，或是集塵盒堵塞了。 | 建議定期清潔滾刷、邊刷、集塵盒、滾筒拖布等。 |
| | | DEEBOT 處於強吸力模式或最大吸力模式。 | 切換至標準模式或靜音模式。靜音模式可能會降低清潔效能。 |
| 8 | DEEBOT 在工作時卡住並停止。 | DEEBOT 被地板上的物體（電線、窗簾、地毯鬚邊等）纏住。 | DEEBOT 將嘗試各種自行脫困方法。如果嘗試失敗，請手動移除障礙物並重新啟動。 |
| | | DEEBOT 可能會卡在入口高度相近的傢俱下方。 | 請抬高傢俱、設置物理屏障，或透過 ECOVACS HOME App 設定虛擬邊界。 |
| | | DEEBOT 被困在狹窄區域中。 | 請整理居家、設置物理屏障，或透過 ECOVACS HOME App 設定虛擬邊界。 |

| No. | 故障異常 | 可能原因 | 解決方法 |
| --- | --- | --- | --- |
| 9 | 在清掃過程中，DEEBOT 可能會遇到路線混亂、移動偏斜、相同定點重複清掃、遺漏小區域等問題。 | 有一大片區域尚未清掃，可能是因為被擋住了。 | 確保房門已打開，清除潛在的障礙物，例如拖鞋和散落的電線。DEEBOT 將在清潔程序結束前進行補掃。 |
| | | 當 DEEBOT 攀爬台階、門檻和門縫條時，驅動輪可能會在地面上打滑，這將影響其對整個居家環境的判斷。 | 關上房間門，或在 App 中設定虛擬邊界。您可以將 DEEBOT 移至該房間，進行單獨清掃。 |
| | | 在剛打蠟或拋光的地板及光滑地磚上，驅動輪和地板之間的摩擦力會減少。 | 請等待地板蠟乾燥後再清掃。 |
| 10 | 返回全能基站之後，DEEBOT 沒有清空集塵盒。 | 尚未打開 App 中的自動集塵功能。 | 打開 App 中的自動集塵功能。 |
| | | 手動將 DEEBOT 移回工作站將不會觸發自動集塵功能。 | 建議讓 DEEBOT 自行返回全能基站。請不要手動移動它。 |
| | | 在請勿打擾模式下，DEEBOT 返回全能基站後將不會清空灰塵。 | 在 App 中關閉請勿打擾模式，或手動開始清空灰塵。 |
| | | 基站偵測到清空效率降低。 | 請依照 [ 定期維護 ] 一節所述更換集塵袋，然後關上集塵艙。如果 App 提示時集塵袋未滿，您可以再放回去。 |
| | | 檢查集塵盒是否已滿並導致堵塞。 | 請依照 [ 定期維護 ] 一節所述清理集塵盒。 |
| | | 如果上述可能原因均已排除，則可能是基站元件異常。 | 請聯絡客服中心尋求協助。 |

| No. | 故障異常 | 可能原因 | 解決方法 |
|---|---|---|---|
| 11 | 自動集塵失敗。 | 基站偵測到清空效率降低。 | 請依照 [ 定期維護 ] 說明來更換集塵袋，然後關緊集塵艙門。如果出現更換提示但集塵袋未裝滿，請取下、重新插入，然後確實關緊艙門。 |
| | | 集塵盒出口被異物堵塞。 | 取出集塵盒，清除出口處的異物。 |
| 12 | 集塵艙內壁很髒。 | 微細顆粒會穿過集塵袋，積聚在集塵艙內壁。 | 清潔集塵艙內壁。 |
| | | 集塵袋破了。 | 檢查並更換集塵袋。 |
| | | 未妥善安裝集塵袋。 | 請正確安裝集塵袋。 |
| | | 集塵桶外蓋未關閉。 | 請檢查集塵桶外蓋是否已正確關閉。 |
| 13 | DEEBOT 工作時漏出灰塵。 | 集塵盒出口被異物堵塞。 | 取出集塵盒，清除出口處的異物。 |
| 14 | 滾筒拖布不旋轉。 | 未正確安裝滾筒拖布。 | 依照 [ 定期維護 ] 章節來正確安裝滾筒拖布。 |
| | | 滾筒拖布被異物堵塞。 | 依照 [ 定期維護 ] 章節來清潔和安裝滾筒拖布。 |
| 15 | 驅動輪被卡住。 | 驅動輪被異物纏住或卡住。 | 旋轉並按壓驅動輪，檢查是否有任何異物包覆或阻塞。如果發現任何異物，請立即清理。如果此問題仍然存在，請聯絡客服中心尋求協助。 |

| No. | 故障異常 | 可能原因 | 解決方法 |
|---|---|---|---|
| 16 | 拖布清洗盤裡裝滿了水，無法清空。語音提示報告拖布清洗盤故障。 | 未正確安裝污水箱。 | 向下輕敲污水箱，確保其安裝正確。 |
| | | 未正確安裝污水箱中的密封塞。 | 確保兩個密封塞均安裝正確。 |
| | | 未正確安裝拖布清洗盤。 | 檢查並確保拖布清洗盤安裝正確。 |
| | | 檢查當拖布清洗盤底座沒有水時，浮球是否卡住。 | 取出拖布清洗盤，將浮球放回原位。 |
| | | 全能基站無法正常排水。 | 將 DEEBOT 放在基站中。確保它正在充電，然後按兩下 ⏻ 。如果問題仍然存在，請聯絡客服中心尋求協助。 |
| | | 拖布清洗盤的吸水口被異物或污垢堵塞。 | 請清洗拖布清洗盤及其濾芯，並確保進水口沒有任何異物。 |
| | | 嘗試上述所有解決方法之後，語音警報仍然存在。 | 關閉基站的電源後再打開。如果此問題仍然存在，請聯絡客服中心尋求協助。 |
| 17 | 拖布烘乾時發出巨大異音 | 啟動集塵盒烘乾功能時噪音變大 | 在 App 中關閉集塵盒烘乾功能 |
| 18 | 污水箱加熱功能異常 | App 中的污水箱加熱功能已被停用 | 在 App 中啟用污水箱加熱功能 |
| | | 主機在排定的污水箱加熱期間正在執行其他任務，例如清掃、烘乾或充電 | 在 App 中手動調整污水箱的加熱排程，並確認該時段內沒有執行任何任務 |
| | | 污水箱底部殘留積水導致短路，致使基站啟動斷電保護 | 1. 檢查污水箱外側底部以及基站上相對應的接觸彈簧是否有殘留水氣。請用面紙將水擦乾，以防止加熱過程中發生短路。2. 日常傾倒污水箱廢水或清潔箱體表面時，請務必保持污水箱外側底部完全乾燥。切勿讓底部直接接觸水，以降低潛在的加熱故障風險。 |

如已採行建議的解決方法卻仍無法解決問題，請聯絡我們的客戶服務以尋求協助。

# 技術規格

| | | | |
|---|---|---|---|
| 型號 | **ZJ2570** | | |
| 額定輸入 | 17.8 V ⎓ 2 A | 快速充電輸入 | 16.4 V ⎓ 10.5 A |
| 充電時間 | 大約 2.5 小時 | | |
| 基站型號 | **CH2620** | | |
| 基站額定輸入 | 220-240 V ～ 50-60 Hz/0.5A | | |
| 基站標稱額定輸出 | 17.8 V ⎓ 2 A | 快速充電輸出（短時間） | 16.4 V ⎓ 10.5 A |
| 額定輸入電流（充電） | 2 A | 功率（集塵） | 400 W |
| 功率（熱水清洗拖布） | 360 W | | |
| 功率（污水箱加熱） | 90 W | | |
| 頻段 | 2400-2483.5MHz | | |
| 聯網待機功率 | 小於 2.00 W | | |

無線模組的輸出功率小於 100 mW。
注意：為了不斷改良產品，技術和設計規格可能會發生變化。
更多配件請瀏覽 https://www.ecovacs.com。

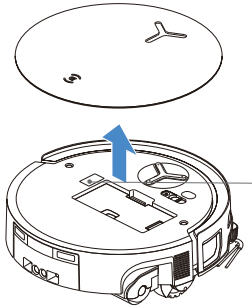

**請使用手機鏡頭掃描 QR Code 以取得使用手冊。**

**Ecovacs Home Service Robotics Co., Ltd.**
No.518 Songwei Road, Wusongjiang Industry Park, Guoxiang Street,
Wuzhong District, Suzhou, Jiangsu, China.